SITE CLEARING

A. PROJECT CONDITIONS: Traffic: Conduct site-clearing operations to ensure minimum interference with roads, streets, walks, and other adjacent occupied or used facilities. Do not close or obstruct streets, walks, or other occupied or used facilities without permission from the governing City. Protection of Existing Improvements: Provide protections necessary to prevent damage to existing improvements indicated to remain in place. Protect improvements on adjoining properties and on Owner's property. Restore damaged improvements to their original condition, as acceptable to property owners. Dust Control: Contractor shall contain particulate debris generated by his work activities from polluting the atmosphere or waterways. Blasting will not be permitted.

B. EXISTING SERVICES: General: Indicated locations are approximate; determine exact locations before commencing Work. Arrange and pay for disconnecting, removing, capping, and plugging utility services. Notify affected utility companies in advance and obtain approval before starting this Work. Place markers to indicate location of disconnected services. Identify service lines and capping locations on Project Record Documents. Protect all existing utilities shown to remain and those not shown.

C. SITE CLEARING: General: Except as otherwise indicated on the plans, remove trees, shrubs, grass, and other vegetation, bollards, retaining walls, fences, other improvements, or obstructions, as required, to permit installation of new construction. Removal includes digging out and off-site disposal of stumps and roots. Cut minor roots of shrubs indicated to remain in a clean and careful manner where such roots and branches obstruct installation of new construction. Topsoil: Topsoil is defined as friable clay loam surface soil found in a depth of not less than 4 inches (100 mm). Satisfactory topsoil is reasonably free of subsoil, clay lumps, stones, and other objects over 2 inches (50 mm) in diameter, and without weeds, roots, and other objectionable material. Strip topsoil and remove from site the excess that will not be used for landscaping. Clearing and Grubbing: Clear site of trees, shrubs, and other vegetation, except for those indicated to be left standing. Completely remove stumps, roots, and other debris protruding through ground surface. Fill depressions caused by clearing and grubbing operations with satisfactory soil material, unless further excavation or earthwork is indicated. Place fill material in horizontal layers not exceeding 8 inches loose depth, and thoroughly compact each layer according to Section "EARTHWORK." All organic or other deleterious materials shall be removed from the project site prior to construction. Areas containing such material shall be over-excavated and reconstructed with engineered fill according to the requirements of Section "EARTHWORK." Removal of Improvements: Remove existing above-grade and below-grade improvements as indicated and as necessary to facilitate new construction. Removing abandoned underground piping or conduits interfering with construction is included under this Section. Remove sections of concrete pavement, concrete sidewalks, concrete aprons, or granite curb to the nearest joint when they are adjacent to those to remain.

D. DISPOSAL OF WASTE MATERIALS: Burning on Owner's Property: Burning is not permitted on Owner's property. Removal from Owner's Property: Remove waste materials from Owner's property and dispose of legally.

E. ENVIRONMENTAL PROTECTION: Prevent debris, soil erosion, pollutants and all other unacceptable material from entering the storm / sanitary sewer system. Prevent dust, smoke or other air borne material from polluting the atmosphere.

F. MONUMENT PROTECTION: Monuments, benchmarks and other reference features bounding this project shall be protected. Should these be disturbed in any manner, the Contractor shall have them replaced as approved by the Owner with no additional cost to the Owner.

EARTHWORK

A. DEFINITIONS: Excavation consists of the removal of material encountered to subgrade elevations and the reuse or disposal of materials removed. Subgrade: The uppermost surface of an excavation or the top surface of a fill or backfill immediately below subbase, drainage fill, or topsoil materials. Borrow: Soil material obtained off-site when sufficient approved soil material is not available from excavations. Subbase Course: The layer placed between the subgrade and base course in a paving system or the layer placed between the subgrade and surface of a pavement or walk. Base Course: The layer placed between the subbase and surface pavement in a paving system. Drainage Fill: Course of washed granular material supporting slab-on-grade placed to cut off upward capillary flow of pore water. Unauthorized excavation consists of removing materials beyond indicated subgrade elevations or dimensions without direction by the Engineer. Unauthorized excavation, as well as remedial work directed by the Engineer, shall be at the Contractor's expense. Structures: Buildings, footings, foundations, retaining walls, slabs, tanks, curbs, mechanical and electrical appurtenances, or other man-made stationary features constructed above or below ground surface. Utilities include on-site underground pipes, conduits, ducts, and cables, as well as underground services within building lines.

B. QUALITY ASSURANCE: Codes and Standards: Perform earthwork complying with requirements of the current IDOT Standard Specifications. Testing and Inspection Service: Coordinate timing and scheduling of all earthwork activity with Owner's geotechnical consultant who will perform soil testing and inspection service for quality control testing during earthwork operations. Preinstallation Conference: Before commencing earthwork, meet with representatives of the governing authorities, Owner, Engineer, Geotechnical Engineer, independent testing agency, and other concerned entities. Review earthwork procedures and responsibilities including testing and inspection procedures and requirements. Notify participants at least 3 working days prior to convening conference. Record discussions and agreements and furnish a copy to each participant.

C. PROJECT CONDITIONS: Existing Utilities: Do not interrupt existing utilities serving adjacent buildings except when permitted in writing by the Owner and Engineer and then only after acceptable temporary utility services have been provided. Provide a minimum 48-hours' notice to the Engineer and Owner, and receive written notice to proceed before interrupting any utility. Contact utility-locator service for area where Project is located before excavating.

D. SOIL MATERIALS: Provide approved borrow soil materials, free of contaminants, from off-site when sufficient soil materials on-site are not available from excavations. Satisfactory Soil Materials: ASTM D 2487 soil classification groups GW, GP, GM, SW, SP, and SM; free of rock or gravel larger than 2 inches in any dimension, debris, waste, frozen materials, vegetation and other deleterious matter. Unsatisfactory Soil Materials: ASTM D 2487 soil classification groups GC, SC, ML, MH, CL, OH, OL, OH, and PT. Subbase and Base Material: Naturally or artificially graded mixture of natural or crushed gravel, crushed stone, and natural or crushed sand, ASTM D 2940, with at least 95 percent passing a 1-1/2 inch sieve and not more than 8 percent passing a No. 200 sieve. Bedding Material: Subbase or base materials with 100 percent passing a 1-inch sieve and not more than 8 percent passing a No. 200 sieve. Drainage Fill: Washed, evenly graded mixture of crushed stone, or crushed gravel, ASTM D 448, coarse aggregate grading size 57, with 100 percent passing a 1-1/2 inch sieve and not more than 5 percent passing a No. 8 sieve. Impervious Fill: Clayey gravel and sand mixture capable of compacting to a dense state. Engineered Fill: Naturally or artificially graded mixture of natural or crushed gravel, crushed stone, and natural or crushed sand; ASTM D 2940; with at least 90 percent passing a 1-1/2 inch (38-mm) sieve and not more than 12 percent passing a No. 200 (0.075-mm) sieve.

E. ACCESSORIES: Detectable Warning Tape: Acid- and alkali-resistant polyethylene film warning tape manufactured for marking and identifying underground utilities, 6-inches wide and 4 mils thick minimum, continuously inscribed with a description of the utility, with metallic core encased in a protective jacket for corrosion protection, detectable by metal detector when tape is buried up to 30-inches deep. Tape Colors: Provide tape colors to utilities as follows: Red: Electric. Yellow: Gas, oil, steam, and dangerous materials. Orange: Telephone and other communications. Blue: Water systems. Green: Sewer systems.

F. PREPARATION: Protect structures, utilities, sidewalks, pavements, and other facilities from damage caused by settlement, lateral movement, undermining, washout, and other hazards created by earthwork operations. Protect subgrades and foundation soils against freezing temperatures or frost. Provide protective insulating materials as necessary. Provide erosion control measures to prevent erosion or displacement of soils and discharge of soil-bearing water runoff or airborne dust to adjacent properties, walkways, and sewer systems.

G. DEWATERING: Prevent surface water and subsurface or ground water from entering excavations, from ponding on prepared subgrades, and from flooding Project site and surrounding area. Protect subgrades and foundation soils from softening and damage by rain or water accumulation.

H. EXCAVATION: Do not use explosives. Unclassified Excavation: Excavation to subgrade elevations regardless of the character of surface and subsurface conditions encountered, including rock, soil materials, and obstructions. If excavated materials intended for fill and backfill include unsatisfactory soil materials and rock, replace with satisfactory soil materials, at no additional cost to the Owner.

I. STABILITY OF EXCAVATIONS: Comply with local codes, ordinances, and requirements of authorities having jurisdiction to maintain stable excavations.

J. EXCAVATION FOR STRUCTURES: Excavate to indicated elevations and dimensions within a tolerance of plus or minus 0.1 feet. Extend excavations a sufficient distance from structures for placing and removing concrete formwork, installing services and other construction, and for inspections. Excavations for Footings and Foundations: Do not disturb bottom of excavation. Excavate by hand to final grade just before placing concrete reinforcement. Trim bottoms to required lines and grades to leave solid base to receive other work.

K. EXCAVATION FOR WALKS AND PAVEMENTS: Excavate surfaces under walks and pavements to indicated cross sections, elevations, and grades.

L. EXCAVATION FOR UTILITY TRENCHES: Excavate trenches to indicated slopes, lines, depths, and invert elevations. Beyond building perimeter, excavate trenches to allow installation of top of pipe below frost line. Excavate trenches to uniform widths to provide a working clearance on each side of pipe or conduit. Excavate trench walls vertically from trench bottom to 12 inches higher than top of pipe or conduit, unless otherwise indicated. Trench Bottoms: Excavate and shape trench bottoms to provide uniform bearing and support of pipes and conduit. Shape subgrade to provide continuous support for bells, joints, and barrels of pipes and for joints, fittings, and bodies of conduits. Remove stones and sharp objects to avoid point loading. For pipes or conduit less than 6 inches in nominal diameter and flat-bottomed, multiple-duct conduit units, hand-excavate trench bottoms and support pipe and conduit on an undisturbed subgrade. For pipes and conduit 6 inches or larger in nominal diameter, shape bottom of trench to support bottom 90 degrees of pipe circumference. Fill depressions with tamped sand backfill. Where encountering rock or another unyielding bearing surface, carry trench excavation 6 inches below invert elevation to receive bedding course.

M. APPROVAL OF SUBGRADE: Notify Engineer and Owner's Geotechnical consultant when excavations have reached required subgrade. When Owner's Geotechnical Engineer determines that unforeseen unsatisfactory soil beneath subgrade is present, continue excavation and replace with compacted backfill or fill material as directed. Unforeseen additional excavation and replacement material will be paid according to the Contract provisions for changes in Work. Proof roll subgrade with heavy pneumatic-tired equipment to identify soft pockets and areas of excess yielding. Do not proof roll wet or saturated subgrades. Reconstruct subgrades damaged by freezing temperatures, frost, rain, accumulated water, or construction activities, as directed by the Engineer.

N. UNAUTHORIZED EXCAVATION: Fill unauthorized excavation under footings by extending indicated bottom elevation of concrete foundation or footing to excavation bottom, without altering required top elevation. Lean concrete fill may be used to bring elevations to proper position when acceptable to the Engineer. Fill unauthorized excavations under other construction as directed by the Engineer. Where indicated widths of utility trenches are exceeded, provide stronger pipe, or special installation procedures, as required by the Engineer.

O. STORAGE OF SOIL MATERIALS: Stockpile excavated materials acceptable for backfill and fill soil materials, including acceptable borrow materials. Stockpile soil materials without intermixing. Place, grade, and shape stockpiles to drain surface water. Cover to prevent wind-blown dust. Stockpile soil materials away from edge of excavations.

P. BACKFILL: Backfill excavations promptly, but not before completing the following: Acceptance of construction below finish grade including, where applicable, dampproofing, waterproofing, and perimeter insulation. Surveying locations of underground utilities for record documents. Testing, inspecting, and approval of underground utilities. Concrete formwork removal. Removal of trash and debris from excavation.

Q. UTILITY TRENCH BACKFILL: Place and compact bedding course on rock and other unyielding bearing surfaces and to fill unauthorized excavations. Shape bedding course to provide continuous support for bells, joints, and barrels of pipes and for joints, fittings, and bodies of conduits. Concrete backfill trenches that carry below or pass under footings and that are excavated within 18 inches of footings. Place concrete to level of bottom of footings. Place and compact initial backfill of satisfactory soil material or subbase material, free of particles larger than 1 inch, to a height of 12 inches over the utility pipe or conduit. Backfill trenches beneath pavement with granular backfill to pavement base course. Carefully compact material under pipe haunches and bring backfill evenly up on both sides and along the full length of utility piping or conduit to avoid damage or displacement of utility system. Coordinate backfilling with utilities testing. Place and compact final backfill of satisfactory soil material to final subgrade. Install warning tape directly above utilities, 12 inches below finished grade, except 6 inches below subgrade under pavements and slabs.

R. FILL: Preparation: Remove vegetation, topsoil, debris, wet, and unsatisfactory soil materials, obstructions, and deleterious materials from ground surface prior to placing fills. Plow strip, or break up sloped surfaces steeper than 1 vertical to 4 horizontal so fill material will bond with existing surface. When subgrade or existing ground surface to receive fill has a density less than that required for fill, break up ground surface to depth required, pulverize, moisture-condition, or aerate soil and recompact to required density. Place fill material in layers to required elevations for each location listed below: Under grass, use satisfactory excavated or borrow soil material. Under walks and pavements, use subbase material, base material, satisfactory excavated material, or borrow soil material. Under steps and ramps, use subbase material. Under footings, use engineered fill.

S. MOISTURE CONTROL: Uniformly moisten or aerate subgrade and each subsequent fill or backfill layer before compaction to within 2 percent of optimum moisture content. Do not place backfill or fill material on surfaces that are muddy, frozen, or contain frost or ice. Remove and replace, or scarify and air-dry satisfactory soil material that is too wet to compact to specified density. Stockpile or spread and dry removed wet satisfactory soil material.

T. COMPACTION: Place backfill and fill materials in layers not more than 8 inches in loose depth for material compacted by heavy compaction equipment, and not more than 4 inches in loose depth for material compacted by hand-operated tampers. Place backfill and fill materials evenly on all sides of structures to required elevations. Place backfill and fill uniformly along the full length of each structure. Percentage of Maximum Dry Density Requirements: Compact soil to not less than the following percentages of maximum dry density according to ASTM D 1557: Under structures and pavements, compact the top 12 inches below subgrade and each layer of backfill or fill material at 95 percent maximum dry density. Under walkways, compact the top 6 inches below subgrade and each layer of backfill or fill material at 92 percent maximum dry density. Under lawn or unpaved areas, compact the top 6 inches below subgrade and each layer of backfill or fill material at 90 percent maximum dry density.

U. GRADING: Uniformly grade areas to a smooth surface, free from irregular surface changes. Comply with compaction requirements and grade to cross sections, lines, and elevations indicated. Provide a smooth transition between existing adjacent grades and new grades. Cut out soft spots, fill low spots, and trim high spots to conform to required surface tolerances. Site Grading: Slope grades to direct water away from buildings and to prevent ponding. Finish subgrades to required elevations within the following tolerances: Lawn or Unpaved Areas: Plus or minus 1.2 inches. Walks: Plus or minus 1.2 inches. Pavements: Plus or minus 1/2 inch.

V. FIELD QUALITY CONTROL: Testing Agency Services: Allow Owner's testing agency to inspect and test each subgrade and each fill or backfill layer. Do not proceed until test results for previously completed work verify compliance with requirements. Owner's testing agency may perform the following tests: Perform field in-place density tests according to ASTM D 1556 (sand cone method), ASTM D 2167 (rubber balloon method), or ASTM D 2937 (drive cylinder method), as applicable. Field in-place density tests may also be performed by the nuclear method according to ASTM D 2922, provided that calibration curves are periodically checked and adjusted to correlate to tests performed using ASTM D 1556. With each density calibration check, check the calibration curves furnished with the moisture gauges according to ASTM D 3017. When field in-place density tests are performed using nuclear methods, make calibration checks of both density and moisture gauges at beginning of work, on each different type of material encountered, and at intervals as directed by the Engineer. Footing Subgrade: At footing subgrades, perform at least one test of each soil stratum to verify design-bearing capacities. Subsequent verification and approval of other footing subgrades may be based on a visual comparison of each subgrade with related tested strata when acceptable to the Engineer. Paved Areas: At subgrade and at each compacted fill and backfill layer, perform at least one field in-place density test for every 2000 sq. ft. or less of paved area or building slab, but in no case fewer than three tests. Trench Backfill: In each compacted initial and final backfill layer, perform at least one field in-place density test for each 150 feet or less of trench, but no fewer than two tests. When testing agency reports that subgrades, fills, or backfills do not comply with specified density, scarify and moisten or aerate, or remove and replace soil to the depth required, recompact and retest until required density is obtained.

W. PROTECTION: Protecting Graded Areas: Protect newly graded areas from traffic, freezing, and erosion. Keep free of trash and debris. Repair and re-establish grades to specified tolerances where completed or partially completed surfaces become eroded, rutted, settled, or lose compaction due to subsequent construction operations or weather conditions. Scarify or remove and replace material to depth directed by the Engineer; reshape and recompact at optimum moisture content to the required density. Settling: Where settling occurs during the Project correction period, remove finished surfacing, backfill with additional approved material, compact, and reconstruct surfacing. Restore appearance, quality, and condition of finished surfacing to match adjacent work, and eliminate evidence of restoration to the greatest extent possible.

X. DISPOSAL OF SURPLUS AND WASTE MATERIALS Disposal: Remove surplus satisfactory soil and waste material, including unsatisfactory soil, trash, and debris, and legally dispose of it off Owner's property.

STORM AND SANITARY SEWERAGE

A. DEFINITIONS: PVC: Polyvinyl chloride plastic.

B. PERFORMANCE REQUIREMENTS: Gravity-Flow, Nonpressure-Piping Pressure Ratings equal to air system test pressure.

C. SUBMITTALS: Product Data: For the following: Pipe. Trench Drains. Shop Drawings: Include details and attachments for the following: Precast concrete manholes, including frames and covers.

D. DELIVERY, STORAGE, AND HANDLING: Do not store plastic pipe, and fittings in direct sunlight. Protect pipe, pipefittings, and seals from dirt and damage. Handle precast concrete manholes and other structures according to manufacturer's written rigging instructions.

E. PROJECT CONDITIONS: Site Information: Notify local utility location service and verify existing utility locations. Existing Utilities: Do not interrupt utilities serving facilities occupied by Owner or others unless permitted under the following conditions and then only after arranging to provide temporary utility services according to requirements indicated: Notify Owner not less than two days in advance of proposed utility interruptions. Do not proceed with utility interruptions without Owner's written permission.

F. MANUFACTURERS: Available Manufacturers: Subject to compliance with requirements, manufacturers offering products that may be incorporated into the Work include, but are not limited to, the following: Any manufacturer providing products that conform to these specifications and drawings.

G. PIPING MATERIALS: See drawings for piping materials and locations.

H. PIPES AND FITTINGS:
1. PVC Sewer Pipe and Fittings: According to the following: PVC Sewer Pipe and Fittings, PVC Sewer Pipe and Fittings, NPS 15 (DN375) and Smaller: ASTM D 3034, SDR 35, for solvent-cemented or gasketed joints. PVC Sewer Pipe and Fittings, NPS 18 (DN450) and Larger: ASTM F 679, T-1 wall thickness, bell and spigot for gasketed joints. Gaskets: ASTM F 477, elastomeric seals.
2. PVC Pressure Pipe: AWWA C900, Class 150, for gasketed joints. PVC Pressure Fittings: AWWA C907, for gasketed joints. Gaskets for PVC Piping: ASTM F 477, elastomeric seals.
3. Reinforced-Concrete Sewer Pipe and Fittings: ASTM C 76 (ASTM C 76M), Class III, Wall B, for gasketed joints. Gaskets: ASTM C 443 (ASTM C 443M), rubber.

A. SPECIAL PIPE COUPLINGS AND FITTINGS: See drawings for locations and type, if any.

B. MANHOLES: Heavy-Traffic Precast Concrete Manholes: ASTM C 913; designed according to ASTM C 890 for A-16, heavy-traffic, structural loading; of depth, shape, and dimensions indicated, with provision for rubber gasketed joints. Ballast: See drawings. Gaskets: Rubber. Grade Rings: See Drawings. Steps: See Drawings. Pipe Connectors: ASTM C 923, resilient, of size required, for each pipe connecting to base section. Cast-in-Place Concrete Manholes: Construct of reinforced-concrete bottom, walls, and top; designed according to ASTM C 890 for A-16, heavy-traffic, structural loading; of depth, shape, dimensions, and appurtenances indicated. Manhole Frames and Covers: In accordance with Governing Authorities requirements. Manhole Joint Sealing System: In accordance with Governing Authorities requirements.

C. EARTHWORK: Excavating, trenching, and backfilling are specified in "Earthwork".

D. IDENTIFICATION: Materials and their installation are specified in "Earthwork".

LAWN SEEDING

A. Provide all equipment, materials, and labor to prepare seed bed and plant seeded bed in new and existing disturbed lawn areas as shown on drawings.

B. Submittals: Seeding schedule: Submit seeding schedule before beginning of construction. Show coordination of normal planting times with construction schedule, and other related work.

C. The seasons for seeding of lawn areas shall be from March 1 to May 15 and August 15 to October 15. The actual seeding of lawns shall be done, however, only during periods within this season which are normal for such work as determined by weather conditions and by accepted practice in the locality of the project and which are approved by the Architect. Only upon written instructions by the Architect may planting begin earlier or continue later than the dates specified.

D. Dormant season seeding of slope areas is acceptable in areas designated by the Owner or Architect. Dormant season seeding to be done in conjunction with installation of erosion control blankets.

E. The preparation of lawn areas to be seeded may begin as soon as the area is designated by the Owner or Architect.

F. Commercial Fertilizer: shall meet the following requirements:
1. Shall be a complete fertilizer containing in available form by weight a minimum of 10% nitrogen, 10% phosphoric acid and 10% potash; a minimum of 50 of the nitrogen to be derived from natural organic material in a slow release form, and of a neutral character.
2. The fertilizer shall be delivered to the site in the original unopened containers which shall bear the manufacturer's guaranteed statement of analysis. Fertilizer shall be stored in a weatherproof place in such a manner that it shall be kept dry and its effectiveness will not be impaired.

G. Grass seed shall be fresh, clean, new-crop seed complying with tolerance for purity and germination established by Official Seed Analysts of North America. Provide seed mixture composed of grass species and proportions as specified. Mixture cannot contain more than .05% weed or crop seed, nor more than 3% inert matter. Seed must be furnished and delivered premixed in the proportions specified below.

H. Grass seed shall be composed of the following varieties which shall be mixed in the proportions and shall test at the minimum percentage of purity and germination specified:

1. Kentucky 31 Fescue mix (for use in non-irrigated turf areas)

Scientific Name and Common Name	Proportion By Weight	Purity	Germination
Festuca elator "Kentucky 31" Kentucky 31 Fescue	85%	98%	90%
Lolium perenne "Manhattan" Manhattan Ryegrass	10%	98%	90%
Poa pratensis Kentucky Bluegrass V.N.S.	5%	98%	85%

2. Weed seed content shall not exceed 0.25 of 1%.

I. Straw: Shall be threshed straw of hay, oats, wheat, barley, or rye, not chopped in short lengths.

J. Repair any eroded areas and make minor grading adjustments to provide good drainage and to meet all walks and paved surfaces.

K. Spread agricultural limestone over all areas to be seeded at the rate of 50 lbs. per 1000 s.f. (2178 lbs. per acre.) with an approved vehicular spreader.

L. Spread fertilizer over all areas to be seeded at the rate of 15 lbs. per 1000 s.f. (654 lbs. per acre) with an approved spreader. Do not apply fertilizer in dormant season seeding areas.

M. Disc and harrow or otherwise cultivate all areas thoroughly in at least two directions to thoroughly mix the above fertilizers into the soil to a depth of four (4) inches.

N. After cultivating, hard rake area to remove clods, rocks (over 1" in largest dimension), weeds roots and debris. Perform grading and shaping refinements to bring surface to true uniform planes free from irregularities and to provide drainage and proper slope to catch basins.

O. With topsoil in semi-dry condition, roll lawn planting areas in two directions at approximately right angles with water ballast roller weighing 100 to 300 lbs. according to soil type.

P. Sow grass seed by mechanical spreaders of approved type, doing the work in two operations at right angles to each other.

Q. Seeding shall be at the following rate:

1. Kentucky 31 Fescue mix shall be seeded at the rate of 12 lbs. per 1000 sq.ft. (523 lbs. per acre).

R. Roll the seeded areas to firmly bed the seed and then spread straw on the seeded areas at the rate of two and a half (2 1/2) tons (dry weight) per acre. It shall be spread evenly and without damage to the seeded area.

S. During seeding work, keep pavements clean and work area in an orderly condition. Upon completion of work, clean area of all debris, superfluous materials and equipment and remove them from the premises.

T. Protect seeding work. Maintain protection during installation and maintenance periods. Treat, repair or replace damaged seeding work as directed.

U. Maintenance shall begin immediately after seeding. Water regularly to keep lawn areas moist to maximize germination and maintain optimum growth and survival. Contractor is responsible to obtain necessary permits and pay fees associated with watering.

V. Maintain seeded areas by watering, fertilizing, removing weeds, mowing, trimming and reseeding as necessary, for a smooth, uniform, acceptable stand of established lawn, free of eroded or bare areas. Maintain lawn areas until final acceptance, but not less than 60 calendar days. Mowing of seeded lawn is the responsibility of the Contractor until final acceptance. The first mowing will not be attempted until the lawn is 4 inches high and thick enough to receive its first mowing.

W. The Contractor shall guarantee the production of a close stand of the specified species of lawn grass. After grass has started, repeatedly reseed areas and part of areas which fail to show uniform stands of grass until all areas are covered with a satisfactory growth of grass. All repairs and reseeding are to be done as part of this Contract and at no extra cost to the Owners.

X. When seed work is completed, including maintenance, Architect will, upon request, make an on-site evaluation to determine acceptability.

CAST-IN-PLACE CONCRETE

A. SUBMITTALS: In addition to the following, comply with submittal requirements in ACI 301. Product Data: For each type of manufactured material and product indicated. Design Mixes: For each concrete mix.

B. QUALITY ASSURANCE: Installer Qualifications: An experienced installer who has completed concrete work similar in material, design, and extent to that indicated for this Project and whose work has resulted in construction with a record of successful in-service performance. Manufacturer Qualifications: A firm experienced in manufacturing ready-mixed concrete products complying with ASTM C 94 requirements for production facilities and equipment. Source Limitations: Obtain each type of cement of the same brand from the same manufacturer's plant, each aggregate from one source, and each admixture from the same manufacturer. Comply with ACI 301, "Specification for Structural Concrete," including the following, unless modified by the requirements of the Contract Documents. General requirements, including submittals, quality assurance, acceptance of structure, and protection of in-place concrete. Formwork and form accessories. Steel reinforcement and supports. Concrete mixtures. Handling, placing, and constructing concrete.

C. FORMWORK: Furnish formwork and form accessories according to ACI 301.

D. STEEL REINFORCEMENT: Reinforcing Bars: ASTM A 615/A 615M, Grade 60, deformed. Plain-Steel Wire: ASTM A 82, as drawn. Plain-Steel Welded Wire Fabric: ASTM A 185, fabricated from as-drawn steel wire into flat sheets.

E. CONCRETE MATERIALS: Portland Cement: ASTM C 150, Type I or II. Normal-Weight Aggregate: ASTM C 33, uniformly graded, not exceeding 1-1/2-inch nominal size. Water: Potable and complying with ASTM C 94.

F. ADMIXTURES: Admixtures certified by manufacturer to contain not more than 0.1 percent water-soluble chloride ions by mass of cement and to be compatible with other admixtures. Do not use admixtures containing calcium chloride. Air-Entraining Admixture: ASTM C 260. Water-Reducing Admixture: ASTM C 494, Type A.

G. RELATED MATERIALS: Joint-Filler Strips: ASTM D 1751, asphalt-saturated cellulosic fiber, or ASTM D 1752, cork or self-expanding cork.

H. CURING MATERIALS: Evaporation Retarder: Waterborne, monomolecular film forming, manufactured for application to fresh concrete. Absorptive Cover: AASHTO M 182, Class 2, burlap cloth made from jute or kenaf, weighing approximately 9 oz./sq. yd dry. Moisture-Retaining Cover: ASTM C 171, polyethylene film or white burlap-polyethylene sheet. Water: Potable. Clear, Solvent-Borne, Membrane-Forming Curing and Sealing Compound: ASTM C 1315, Type 1, Class A. Clear, Waterborne, Membrane-Forming Curing and Sealing Compound: ASTM C 1315, Type 1, Class A.

I. CONCRETE MIXES: Comply with ACI 301 requirements for concrete mixtures. Prepare design mixes, proportioned according to ACI 301, for normal-weight concrete determined by either laboratory trial mix or field test data bases, as follows: Compressive Strength (28 Days): 4000 psi. Slump: 3 inches. Add air-entraining admixture at manufacturer's prescribed rate to result in concrete at point of placement having an air content of 5.0 percent within a tolerance of plus 1.0 or minus 1.5 percent.

J. CONCRETE MIXING: Ready-Mixed Concrete: Comply with ASTM C 94. When air temperature is between 85 and 90 deg F, reduce mixing and delivery time from 1-1/2 hours to 75 minutes; when air temperature is above 90 deg F, reduce mixing and delivery time to 60 minutes.

K. FORMWORK: Design, construct, erect, shore, brace, and maintain formwork according to ACI 301.

L. STEEL REINFORCEMENT: Comply with CRSI's "Manual of Standard Practice" for fabricating, placing, and supporting reinforcement. Do not cut or puncture vapor retarder. Repair damage and reseal vapor retarder before placing concrete.

M. JOINTS: Construct joints true to line with faces perpendicular to surface plane of concrete. Construction Joints: Locate and install so as not to impair strength or appearance of concrete, at locations indicated or as approved by Engineer. Isolation Joints: Install joint-filler strips at junctions with slabs-on-grade and vertical surfaces, such as column pedestals, foundation walls, grade beams, and other locations, as indicated. Extend joint fillers full width and depth of joint, terminating flush with finished concrete surface, unless otherwise indicated.

N. CONCRETE PLACEMENT: Comply with recommendations in ACI 304R for measuring, mixing, transporting, and placing concrete. Do not add water to concrete during delivery, at Project site, or during placement. Consolidate concrete with mechanical vibrating equipment.

O. FINISHING FORMED SURFACES: Smooth-Formed Finish: As-cast concrete texture imparted by form-facing material, arranged in an orderly and symmetrical manner with a minimum of seams. Repair and patch tie holes and defective areas. Completely remove fins and other projections. See Drawings for areas of concrete to receive smooth rubbed finish.

P. FINISHING UNFORMED SURFACES: Comply with ACI 302.1R for screeding, restraightening, and finishing operations for concrete surfaces. Do not wet concrete surfaces. Smooth Rubbed Finish: See Drawings for areas of concrete to receive smooth rubbed finish.

Q. TOLERANCES: Comply with ACI 117, "Specifications for Tolerances for Concrete Construction and Materials."

R. CONCRETE PROTECTION AND CURING: Protect freshly placed concrete from premature drying and excessive cold or hot temperatures. Comply with ACI 306.1 for cold-weather protection, and follow recommendations in ACI 305R for hot-weather protection during curing. Evaporation Retarder: Apply evaporation retarder to concrete surfaces if hot, dry, or windy conditions cause moisture loss approaching 0.2 lb/sq. ft. x h before and during finishing operations. Apply according to manufacturer's written instructions after placing, screeding, and bull floating or darbying concrete, but before float finishing. Begin curing after finishing concrete, but not before free water has disappeared from concrete surface. Curing Methods: Cure formed and unformed concrete for at least seven days by moisture curing, moisture-retaining-cover curing, curing compound, or a combination of these as follows: Moisture Curing: Keep surfaces continuously moist for not less than seven days with the following materials: Water. Continuous water-fog spray. Absorptive cover, water saturated and kept continuously wet. Cover concrete surfaces and edges with 12-inch lap over adjacent absorptive covers. Moisture-Retaining-Cover Curing: Cover concrete surfaces with moisture-retaining cover for curing concrete, placed in widest practicable width, with sides and ends lapped at least 12 inches, and sealed by waterproof tape or adhesive. Immediately repair any holes or tears during curing period using cover material and waterproof tape. Curing Compound: Apply uniformly in continuous operation by power spray or roller according to manufacturer's written instructions. Recoat areas subjected to heavy rainfall within three hours after initial application. Maintain continuity of coating and repair damage during curing period.

S. FIELD QUALITY CONTROL: Testing Agency: Owner will engage a qualified independent testing and inspecting agency to sample materials, perform tests, and submit test reports during concrete placement. Tests will be performed according to ACI 301. Testing Frequency: Obtain one composite sample for each day's pour of each concrete mix exceeding 5 cu. yd., but less than 25 cu. yd., plus one set for each additional 50 cu. yd. or fraction thereof.

T. REPAIRS: Remove and replace concrete that does not comply with requirements in this Section.

MB Engineering, Inc.
606 Ryan Drive
Energy, IL 62933
(314) 368-3040

STATE OF MISSOURI
MICHAEL A. BUESCHER
NUMBER E-2001018714
PROFESSIONAL ENGINEER
7/25/23

Michael A. Buescher, P.E. Civil Engineering
Missouri P.E. E-2001018714

MB Engineering, Inc. Missouri Authority No. E-2015041404

The Professional Engineer's seal affixed to this sheet indicates that the named Engineer has prepared or directed the preparation of the material shown only on this sheet. Other drawings and documents not exhibiting this seal shall not be considered prepared by or the responsibility of the undersigned.

PROJECT REVISION:

NO:	DATE:	DESCRIPTION:
1	11-21-22	FOR REVIEW
2	05-16-23	CITY COMMENTS
3	07-11-23	CITY COMMENTS
4	07-25-23	CITY COMMENTS

3601 SW Hollywood Dr.

Lee's Summit, MO 64082

DATE: 11-21-22
DRAFTED BY: KB
APPRVD. BY: MB

SHEET TITLE: Specifications

SHEET NUMBER: C1-01

PROJECT NO: 22-752

JOINT SEALANTS

A. PERFORMANCE REQUIREMENTS: Provide elastomeric joint sealants that establish and maintain watertight and airtight continuous joint seals without staining or deteriorating joint substrates.

B. SUBMITTALS: Product Data: For each joint-sealant product indicated. Samples for Initial Selection: Manufacturer's color charts consisting of strips of cured sealants showing the full range of colors available for each product exposed to view. Samples for Verification: For each type and color of joint sealant required, provide Samples with joint sealants in 1/2 inch (13 mm) wide joints formed between two 6-inch (150 mm) long strips of material matching the appearance of exposed surfaces adjacent to joint sealants. Product Certificates: For each type of joint sealant and accessory, signed by product manufacturer. Qualification Data: For Installer. Compatibility and Adhesion Test Reports: From sealant manufacturer, indicating the following: Materials forming joint substrates and joint-sealant backings have been tested for compatibility and adhesion with joint sealants. Interpretation of test results and written recommendations for primers and substrate preparation needed for adhesion. Warranties: Special warranties specified in this Section.

C. QUALITY ASSURANCE: Installer Qualifications: Manufacturer's authorized Installer who is approved or licensed for installation of elastomeric sealants required for this Project. Source Limitations: Obtain each type of joint sealant through one source from a single manufacturer. Preinstallation Conference: Conduct conference at Project site to comply with requirements in Division 1 Section "Project Management and Coordination."

D. PROJECT CONDITIONS: Do not proceed with installation of joint sealants under the following conditions: When ambient and substrate temperature conditions are outside limits permitted by joint-sealant manufacturer. When joint substrates are wet. Where joint widths are less than those allowed by joint-sealant manufacturer for applications indicated. Contaminants capable of interfering with adhesion have not yet been removed from joint substrates.

E. WARRANTY: Special Installer's Warranty: Installer's standard form in which Installer agrees to repair or replace elastomeric joint sealants that do not comply with performance and other requirements specified in this Section within specified warranty period. Warranty Period: Two years from date of Substantial Completion. Special warranties specified in this Article exclude deterioration or failure of elastomeric joint sealants from the following: Movement of the structure resulting in stresses on the sealant exceeding sealant manufacturer's written specifications for sealant elongation and compression caused by structural settlement or errors attributable to design or construction. Disintegration of joint substrates from natural causes exceeding design specifications. Mechanical damage caused by individuals, tools, or other outside agents. Changes in sealant appearance caused by accumulation of dirt or other atmospheric contaminants.

F. MANUFACTURERS: Available Manufacturers: Subject to compliance with requirements, manufacturers offering products that may be incorporated into the Work include, but are not limited to, the following: Any manufacturer providing products that conform to these specifications and drawings.

G. MATERIALS, GENERAL: Compatibility: Provide joint sealants, backings, and other related materials that are compatible with one another and with joint substrates under conditions of service and application, as demonstrated by sealant manufacturer, based on testing and field experience. Colors of Exposed Joint Sealants: As selected by Owner from manufacturer's full range.

H. ELASTOMERIC JOINT SEALANTS: Elastomeric Sealants: Comply with ASTM C 920 and other requirements indicated for each liquid-applied chemically curing sealant specified, including those referencing ASTM C 920 classifications for type, grade, class, and uses related to exposure and joint substrates. Multicomponent Nonsag Urethane Sealant: Products: Pecora Corporation; Dynatrol II. Tremco; Dymeric 511. Tremco; Vulkem 922. ype and Grade: M (multicomponent) and NS (nonsag). Class: 50. Use Related to Exposure: NT (nontraffic). Multicomponent Nonsag Urethane Sealant: Products: Pacific Polymers, Inc.; Elasto-Thane 227 High Shore Type II (Gun Grade). Pacific Polymers, Inc.; Elasto-Thane 227 Type II (Gun Grade). Pecora Corporation; Dynatred. Polymeric Systems Inc.; PSI-270. Type and Grade: M (multicomponent) and NS (nonsag). Class: 25. Use Related to Exposure: T (traffic). Uses Related to Joint Substrates: M, [G,]A, and, as applicable to joint substrates indicated.

I. JOINT-SEALANT BACKING: Provide sealant backings of material and type that are nonstaining; are compatible with joint substrates, sealants, primers, and other joint fillers; and are approved for applications indicated by sealant manufacturer based on field experience and laboratory testing. Cylindrical Sealant Backings: ASTM C 1330, Type C (closed-cell material with a surface skin) and of size and density to control sealant depth and otherwise contribute to producing optimum sealant performance.

J. MISCELLANEOUS MATERIALS: Primer: Material recommended by joint-sealant manufacturer where required for adhesion of sealant to joint substrates indicated, as determined from preconstruction joint-sealant-substrate tests and field tests.

K. EXAMINATION: Examine joints indicated to receive joint sealants, with Installer present, for compliance with requirements for joint configuration, installation tolerances, and other conditions affecting joint-sealant performance. Proceed with installation only after unsatisfactory conditions have been corrected.

L. PREPARATION: Surface Cleaning of Joints: Clean out joints immediately before installing joint sealants to comply with joint-sealant manufacturer's written instructions and the following requirements: Remove all foreign material from joint substrates that could interfere with adhesion of joint sealant, including dust, paints (except for permanent, protective coatings tested and approved for sealant adhesion and compatibility by sealant manufacturer), old joint sealants, oil, grease, waterproofing, water repellents, water, surface dirt, and frost. Clean porous joint substrate surfaces by brushing, grinding, blast cleaning, mechanical abrading, or a combination of these methods to produce a clean, sound substrate capable of developing optimum bond with joint sealants. Remove loose particles remaining after cleaning operations above by vacuuming or blowing out joints with oil-free compressed air. Porous joint substrates include the following: Concrete. Masonry. Remove laitance and form-release agents from concrete. Joint Priming: Prime joint substrates, where recommended in writing by joint-sealant manufacturer. Apply primer to comply with joint-sealant manufacturer's written instructions. Confine primers to areas of joint-sealant bond; do not allow spillage or migration onto adjoining surfaces.

M. INSTALLATION OF JOINT SEALANTS: Comply with joint-sealant manufacturer's written installation instructions for products and applications indicated, unless more stringent requirements apply. Sealant Installation Standard: Comply with recommendations in ASTM C 1193 for use of joint sealants as applicable to materials, applications, and conditions indicated. Install sealant backings of type indicated to support sealants during application and at position required to produce cross-sectional shapes and depths of installed sealants relative to joint widths that allow optimum sealant movement capability. Do not leave gaps between ends of sealant backings. Do not stretch, twist, puncture, or tear sealant backings. Remove absorbent sealant backings that have become wet before sealant application and replace them with dry materials. Install sealants using proven techniques that comply with the following and at the same time backings are installed: Place sealants so they directly contact and fully wet joint substrates. Completely fill recesses in each joint configuration. Produce uniform, cross-sectional shapes and depths relative to joint widths that allow optimum sealant movement capability. Tooling of Nonsag Sealants: Immediately after sealant application and before skinning or curing begins, tool sealants according to requirements specified below to form smooth, uniform beads of configuration indicated; to eliminate air pockets; and to ensure contact and adhesion of sealant with sides of joint. Remove excess sealant from surfaces adjacent to joints. Use tooling agents that are approved in writing by sealant manufacturer and that do not discolor sealants or adjacent surfaces. provide concave joint configuration per Figure 5A in ASTM C 1193, unless otherwise indicated.

N. PROTECTION: Protect joint sealants during and after curing period from contact with contaminating substances and from damage resulting from construction operations or other causes so sealants are without deterioration or damage at time of Substantial Completion. If, despite such protection, damage or deterioration occurs, cut out and remove damaged or deteriorated joint sealants immediately so installations with repaired areas are indistinguishable from original work.

O. JOINT-SEALANT SCHEDULE: Joint-Sealant Application: Exterior vertical and horizontal nontraffic construction joints in cast-in-place concrete. Joint Sealant: Multicomponent nonsag urethane sealant. Joint-Sealant Color: As selected by Owner from manufacturer's full range.

WATER SERVICE

A. Specification includes water systems piping for domestic service outside the building.

B. Minimum Working Pressure Ratings: Underground Piping: 150 psig (1035 kPa).

C. Submit product data, including pressure rating and rated capacity for the following: Piping. Valves. Curb stops.

D. Comply with requirements of Local Water Division, including tapping of service lines and backflow prevention.

E. Comply with standards of authorities having jurisdiction for potable water piping and plumbing systems. Include materials, installation, testing, and disinfection.

F. Perform site survey, research public utility records, and verify existing utility locations. Contact utility-locating service for area where Project is located prior to excavation.

G. Verify that water system piping may be installed in compliance with original design and referenced standards.

H. Coordinate connection to water service line with the Owner.

I. Coordinate with pipe materials, sizes, entry locations, and pressure requirements of building piping system.

J. Coordinate with other utility work.

K. Curb Stops: Bronze body, ground key plug or ball, and wide tee head, with inlet and outlet to match service piping material.

L. Service Boxes for Curb Stops: Cast-iron box with telescoping top section of length required for depth of bury of valve. Include cover having lettering "WATER," and bottom section with base of size to fit over curb stop and barrel approximately 3 inches (75 mm) in diameter. Provide steel tee-handle shutoff rod with each service box. Shutoff rod shall have tee handle with 1 pointed end, stem of length to operate curb stop, and slotted end fitting curb stop head.

M. Use pipe, tube, fittings, and joining methods according to following applications: Domestic Water Service: Ductile-Iron, Push-on-Joint Pipe, AWWA C151, with cement-mortar lining and seal coat according to AWWA C104. Include rubber compression gasket according to AWWA C111.

N. Ductile-Iron Piping: Push-on Joints, AWWA C111 rubber gaskets and lubricant.

O. Plastic Pipe-Flange Gasket, Bolts, and Nuts: Type and material recommended by piping system manufacturer, unless otherwise indicated.

P. Nonrising-Stem, Resilient-Seated Gate Valves, 3-Inch NPS (DN80) and Larger: AWWA C509, gray- or ductile-iron body and bonnet; with bronze or gray- or ductile-iron gate, resilient seats, bronze stem, and stem nut. Include 200-psig (1380-kPa) minimum working-pressure design, interior coating according to AWWA C550, and push-on or mechanical-joint ends.

Q. Install components having pressure rating equal to or greater than system operating pressure.

R. Install fittings for changes in direction and branch connections.

S. Install continuous plastic underground warning tape during back-filling of trench for underground water service piping. Locate 6 inches (150 mm) to 8 inches (200 mm) below finished grade, directly over piping.

T. Hydrostatic Tests: Test at not less than 1-1/2 times working pressure for 2 hours. Increase pressure in 50-psig (350-kPa) increments and inspect each joint between increments. Hold at test pressure for 1 hour; decrease to 0 psig (0 kPa). Slowly increase again to test pressure and hold for 1 more hour. Maximum allowable leakage is 2 quarts (1.89 L) per hour per 100 joints. Remake leaking joints with new materials and repeat test until leakage is within above limits.

U. Clean and disinfect water distribution piping as follows:

V. Purge new water distribution piping systems and parts of existing systems that have been altered, extended, or repaired prior to use.

W. Use purging and disinfecting procedure prescribed by authority having jurisdiction or, if method is not prescribed by that authority, use procedure described in AWWA C651

X. Prepare reports for purging and disinfecting activities.

HOT-MIX ASPHALT PAVING

A. Provide hot-mix asphalt pavement according to the materials, workmanship, and other applicable requirements of the standard specifications of the state or of authorities having jurisdiction.
1. Standard Specification: the current Missouri Standard Specifications for Highway Construction.
2. Measurement and payment provisions and safety program submittals included in standard specifications do not apply to this Section.

B. Job-Mix Designs: Provide certification, by authorities having jurisdiction, of approval of each job mix proposed for the Work.

C. Material Certificates: Provide certificates signed by manufacturers certifying that each material complies with requirements.

D. Installer Qualifications: Engage an experienced installer who has completed hot-mix asphalt paving similar in material, design, and extent to that indicated for this Project and with a record of successful in-service performance.

E. Manufacturer Qualifications: Engage a firm experienced in manufacturing hot-mix asphalt similar to that indicated for this Project and with a record of successful in-service performance.
1. Firm shall be a registered and approved paving mix manufacturer with MoDOT.

F. Asphalt-Paving Publication: Comply with AI's "The Asphalt Handbook," except where more stringent requirements are indicated.

G. General: All materials shall conform to the current Missouri Standard Specifications for Highway Construction.

H. Coarse Aggregate:
1. Asphaltic Concrete Pavement: This material shall conform to Section 1002.2 of the current Missouri Standard Specifications for Highway Construction.

I. Fine Aggregate:
1. Asphaltic Concrete Pavement: This material shall conform to Section 1002.3 of the current Missouri Standard Specifications for Highway Construction.

J. Asphalt Cement: This material shall conform to Section 1015.5 of the current Missouri Standard Specifications for Highway Construction. Penetration Grade 60 to 70 shall be used from approximately June 15 to September 20 or when the average ambient temperature is 70 degrees F. or higher. Penetration Grade 85 to 100 shall be used at other times during the year when the average ambient temperature ranges from 40 degrees to 70 degrees F.

K. Prime Coat: The prime coat shall be Type MC Liquid Asphalt, Grade 30, and shall conform to Section 1015.20.4 of the current Missouri Standard Specifications for Highway Construction. Liquid asphalt may be changed one grade by the engineer during construction at no change in unit price.

L. Tack Coat: The tack coat shall be Type SS-1H Emulsified Asphalt and shall conform to Section 1015.10 of the current Missouri Standard Specifications for Highway Construction.

M. Water: Potable.

N. Verify that subgrade is dry and in suitable condition to support paving and imposed loads.

O. Proof-roll subbase using heavy, pneumatic-tired rollers to locate areas that are unstable or that require further compaction.

P. Notify Engineer in writing of any unsatisfactory conditions. Do not begin paving installation until these conditions have been satisfactorily corrected.

Q. Immediately before placing asphalt materials, remove loose and deleterious material from substrate surfaces. Ensure that prepared subgrade is ready to receive paving.
1. Sweep loose granular particles from surface of unbound-aggregate base course. Do not dislodge or disturb aggregate embedded in compacted surface of base course.

S. Prime Coat: Apply uniformly over surface of compacted-aggregate base at a rate of 0.15 to 0.50 gal./sq. yd.. Apply enough material to penetrate and seal, but not flood, surface. Allow prime coat to cure for 72 hours minimum.
1. If prime coat is not entirely absorbed within 24 hours after application, spread sand over surface to blot excess asphalt. Use just enough sand to prevent pickup under traffic. Remove loose sand by sweeping before pavement is placed and after volatiles have evaporated.
2. Protect primed substrate from damage until ready to receive paving.

T. Complete compaction before mix temperature cools to 185 deg F.

U. Thickness: Compact each course to produce the thickness indicated within the following tolerances:
1. Base Course: Plus or minus 1/2 inch.
2. Surface Course: Plus 1/4 inch, no minus.

V. Surface Smoothness: Compact each course to produce a surface smoothness within the following tolerances as determined by using a 10-foot straightedge applied transversely or longitudinally to paved areas:
1. Base Course: 1/4 inch.
2. Surface Course: 1/8 inch.
3. Crowned Surfaces: Test with crowned template centered and at right angle to crown. Maximum allowable variance from template is 1/4 inch.

W. Testing Agency: Owner will engage a qualified independent testing agency to perform field inspections and tests and to prepare test reports.
1. Testing agency will conduct and interpret tests and state in each report whether tested Work complies with or deviates from specified requirements.

MB Engineering, Inc.
606 Ryan Drive
Energy, IL 62933
(314) 368-3040

STATE OF MISSOURI
MICHAEL A. BUESCHER
NUMBER E-2001018714
PROFESSIONAL ENGINEER
7/25/23

Michael A. Buescher, P.E. Civil Engineering
Missouri P.E. E-2001018714

MB Engineering, Inc. Missouri Authority No. E-2015041404

The Professional Engineer's seal affixed to this sheet indicates that the named Engineer has prepared or directed the preparation of the material shown only on this sheet. Other drawing or documents not exhibiting this seal shall not be considered prepared by or the responsibility of the undersigned.

PROJECT REVISION:

NO:	DATE:	DESCRIPTION:
1	11-21-22	FOR REVIEW
2	05-16-23	CITY COMMENTS
3	07-11-23	CITY COMMENTS
4	07-25-23	CITY COMMENTS

3601 SW Hollywood Dr.

Lee's Summit, MO 64082

DATE: 11-21-22
DRAFTED BY: KB
APPRVD. BY: MB

SHEET TITLE:
Specifications

SHEET NUMBER:
C1-02

PROJECT NO: 22-752

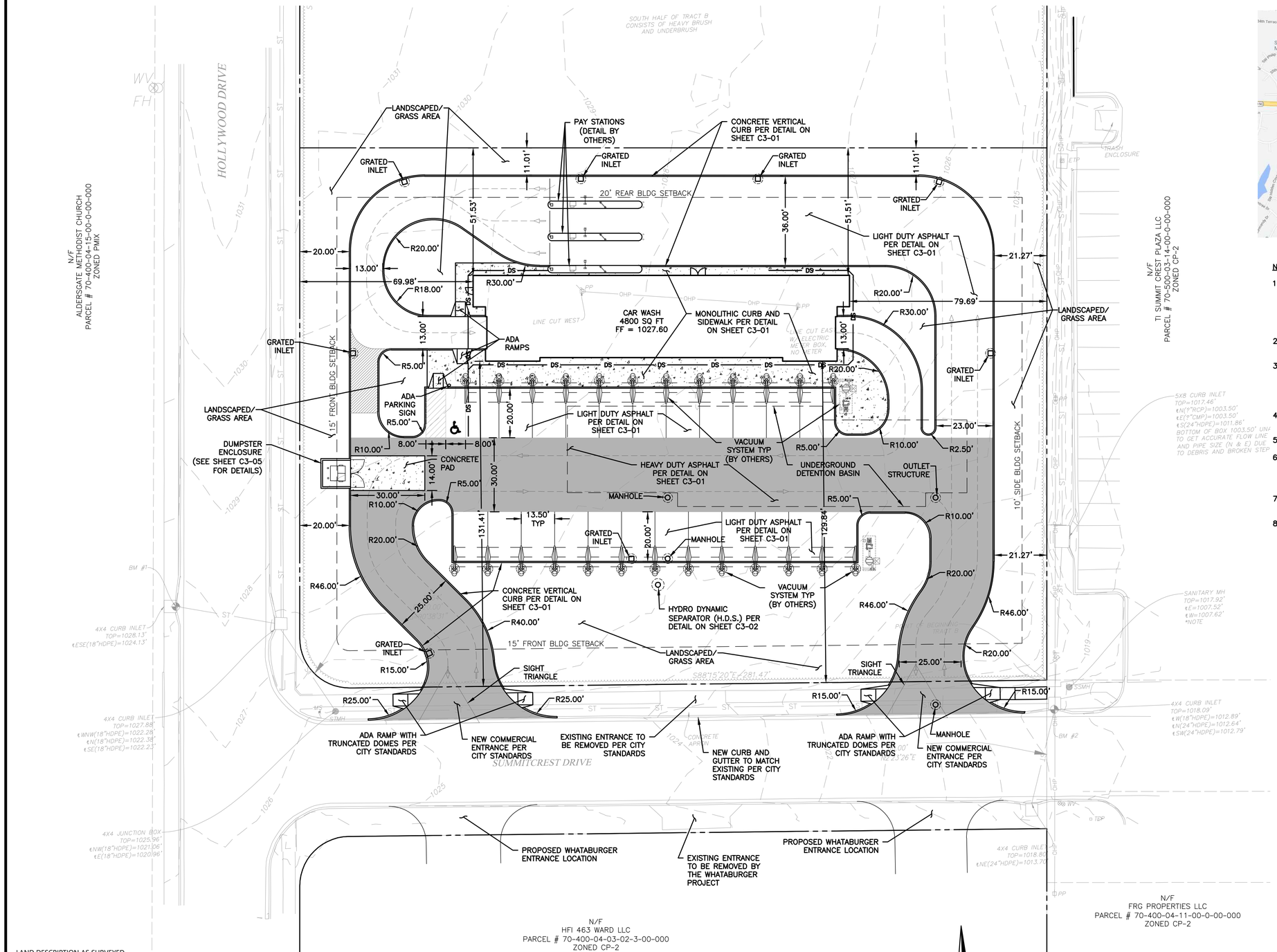

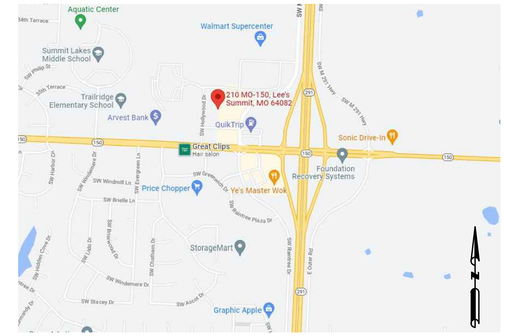

LOCATION MAP

NOTES:

1. UNDERGROUND FACILITIES, STRUCTURES AND UTILITIES HAVE BEEN PLOTTED FROM AVAILABLE SURVEYS AND RECORDS AND THEREFORE THEIR LOCATIONS MUST BE CONSIDERED APPROXIMATE ONLY. IT IS POSSIBLE THAT THERE MAY BE OTHER, THE EXISTENCE OF WHICH IS PRESENTLY NOT KNOWN OR SHOWN. IT IS THE CONTRACTORS RESPONSIBILITY TO DETERMINE THEIR EXISTENCE AND EXACT LOCATION BEFORE EXCAVATION OR TRENCHING TO AVOID DAMAGE THERETO.
2. ALL DEMOLITION DEBRIS SHALL BE REMOVED FROM THE SITE AND PROPERLY DISPOSED OF ACCORDING TO ALL FEDERAL, STATE, AND LOCAL REGULATIONS.
3. THE CONTRACTOR SHALL TAKE ALL NECESSARY PRECAUTIONS NOT TO DAMAGE ANY EXISTING SITE FEATURES TO REMAIN. IF ANY DAMAGE OCCURS, THE CONTRACTOR SHALL CONTACT THE OWNERS REPRESENTATIVE IMMEDIATELY. THE CONTRACTOR SHALL REPAIR ALL DAMAGED ITEMS TO THE SATISFACTION OF THE OWNER AT NO ADDITIONAL COST.
4. CONTRACTOR SHALL CALL 1-800-DIG-RITE OR MO1CALL.COM 3 DAYS BEFORE ANY EXCAVATION WORK.
5. SEE SHEET C2-03 FOR UTILITY PLAN
6. ALL CONSTRUCTION SHALL FOLLOW THE CITY OF LEE'S SUMMIT DESIGN AND CONSTRUCTION MANUAL AS ADOPTED BY ORDINANCE 5813. WHERE DISCREPANCIES EXIST BETWEEN THESE PLANS AND THE DESIGN AND CONSTRUCTION MANUAL, THE DESIGN AND CONSTRUCTION MANUAL SHALL PREVAIL.
7. NO OIL OR GAS WELLS ARE ON SITE PER MISSOURI DEPARTMENT OF NATURAL RESOURCES G.I.S. OIL AND GAS WELL INTERACTIVE MAP
8. CONTRACTOR TO MAKE SURE ACCESSIBLE PARKING HAS A VERTICAL CLEARANCE OF 98 INCHES MINIMUM AT THE SPACE AND ALONG THE VEHICULAR ROUTE THERETO

SITE DATA

	SQ. FT	ACRES	PERCENT
TOTAL BUILDING FLOOR AREA	4,881	0.11	7.47
TOTAL SITE AREA	65,296	1.50	100.00
LIMITS OF DISTURBANCE	66,876	1.54	102.42
EXISTING PERVIOUS	65,296	1.50	100.00
EXISTING IMPERVIOUS	0	0.00	0.00
TOTAL PROPOSED PERVIOUS	18,949	0.44	29.02
TOTAL PROPOSED IMPERVIOUS	46,347	1.06	70.98
EXISTING ZONING IS AG-AGRICULTURAL			
PROPOSED ZONING IS CP-2 PLANNED COMMUNITY COMMERCIAL			
FLOOR AREA RATIO = 0.075			

PHASING PLAN

PROJECT PHASE	BP DESCRIPTION	DATE
A - PRE CONSTRUCTION	PREPARE SITE FOR CONSTRUCTION INCLUDING ESTABLISHING E&S PERIMETER CONTROLS	UNKNOWN AT THIS TIME
B - PHASE I CONSTRUCTION	TOP SOIL STOCK PILE PROTECTION, SITE CLEARING, TEMPORARY SEEDING, GENERAL SITE PREP	UNKNOWN AT THIS TIME
C - PHSE II CONSTRUCTION	CONSTRUCT BUILDING ASPHALT PAVING, STORM STRUCTURES INSTALLATIONS	UNKNOWN AT THIS TIME
D - FINAL STABILIZATION	PERMANENT SEEDING	UNKNOWN AT THIS TIME

PARKING DATA

	REQUIRED	PROVIDED
STANDARD	2	23
HANDICAP	1	1
TOTAL	3	24
1 PARKING SPACE REQUIRED FOR EACH EMPLOYEE ON MAXIMUM SHIFT		
1 ADA SPACE PER 25 STANDARD SPACES		

LAND DESCRIPTION AS SURVEYED

TRACT B:
PART OF THE SOUTHEAST QUARTER OF THE SOUTHEAST QUARTER OF SECTION 30, TOWNSHIP 47, RANGE 31, LEE'S SUMMIT, JACKSON COUNTY, MISSOURI, DESCRIBED AS FOLLOWS:
COMMENCING AT THE SOUTHWEST CORNER OF HAWKINS' COMMERCIAL LOT 1, RECORDED AS DOCUMENT NO. 2000I0062550, BEING ALSO THE INTERSECTION OF THE NORTH RIGHT OF WAY LINE OF MISSOURI 150 HIGHWAY AS SHOWN IN RIGHT OF WAY DEED DOCUMENT NO. 2014E0080868 AND THE EASTERLY LINE OF THE DOCUMENT RECORDED AS 1988I0875030; THENCE NORTH 02°23'26" EAST, ALONG THE WEST LINE OF SAID HAWKINS' COMMERCIAL LOT 1, A DISTANCE OF 208.16 FEET, TO THESOUTHEAST CORNER OF RIGHT OF WAY TAKEN OF SUMMITCREST DRIVE AS ESTABLISHED BY SAID RIGHT OF WAY DOCUMENT NO. 2014E0080868 AND PROLONGATION OF THE WEST LINE OF SAID HAWKINS' COMMERCIAL LOT 1; THENCE NORTH 02°23'26" EAST,A DISTANCE OF 60.00 FEET, TO THE INTERSECTION OF THE NORTH RIGHT OF WAY LINE OF SAID SUMMITCREST DRIVE AND THE EASTERLY LINE OF THE DOCUMENT RECORDED AS 1988I0875030 AND THE WEST LINE OF SUMMITCREST PLAZA LOT 1 RECORDED AS DOCUMENT NO. 2001I0010320, BEING ALSO THE TRUE POINT OF BEGINNING OF TRACT B; THENCE ALONG THE WEST LINE OF SAID SUMMITCREST PLAZA, NORTH 2°23'26" EAST, A DISTANCE OF 583.70 FEET, TO THE POINT OF INTERSECTION OF KENBRIDGECROSSING AS ESTABLISHED IN SAID RIGHT OF WAY DEED IN DOCUMENT NUMBER 2014E0080868 AND THE EASTERLY LINE OF THE SAID DOCUMENT NO. 1988I0875030, BEING ALSO SAID WEST LINE OF SUMMITCREST PLAZA; THENCE ALONG SAID RIGHT OF WAY THE FOLLOWING FIVE (5) COURSES: NORTH 87°54'56" WEST, A DISTANCE OF 281.79; THENCE ALONG A CURVE TO THE LEFT,HAVING A RADIUS OF 20.00 FEET, AN ARC LENGTH OF 31.31 FEET, AND A DELTA OF 89°41'48"; THENCE SOUTH 2°23'24" WEST,A DISTANCE OF 545.37 FEET; THENCE ALONG A CURVE TO THE LEFT, WITH A RADIUS OF 20.00 FEET, AN ARC LENGTH OF 31.64 FEET, AND A DELTA OF 90°38'31"; THENCE SOUTH 88°15'20" EAST, A DISTANCE OF 281.47 FEET, TO THE POINT OFBEGINNING. ALSO KNOWN AS TRACT B, AS SHOWN ON THE CERTIFICATE OF SURVEY RECORDED 7/27/2021 AS DOCUMENT NO. 2021E0081920 IN SURVEY BOOK 51 AT PAGE 95, AND CORRECTED BY THE AFFIDAVIT RECORDED 1/10/2022 AS DOCUMENT NO. 2022E0002897.

MB Engineering, Inc.
606 Ryan Drive
Energy, IL 62933
(314) 368-3040

STATE OF MISSOURI
MICHAEL A. BUESCHER
NUMBER E-2001018714
PROFESSIONAL ENGINEER
7/25/23

Michael A. Buescher, P.E. Civil Engineering
Missouri P.E. E-2001018714

MB Engineering, Inc. Missouri Authority No. E-2015041404

The Professional Engineer's seal affixed to this sheet indicates that the named Engineer has prepared or directed the preparation of the material shown only on this sheet. Other drawings and documents not exhibiting this seal shall not be considered prepared by or the responsibility of the undersigned.

PROJECT REVISION:

NO:	DATE:	DESCRIPTION:
1	11-21-22	FOR REVIEW
2	05-16-23	CITY COMMENTS
3	07-11-23	CITY COMMENTS
4	07-25-23	CITY COMMENTS

3601 SW Hollywood Dr.

Lee's Summit, MO 64082

DATE: 11-21-22
DRAFTED BY: KB
APPRVD. BY: MB

SHEET TITLE: SITE PLAN

SHEET NUMBER:
C2-01

PROJECT NO: 22-752

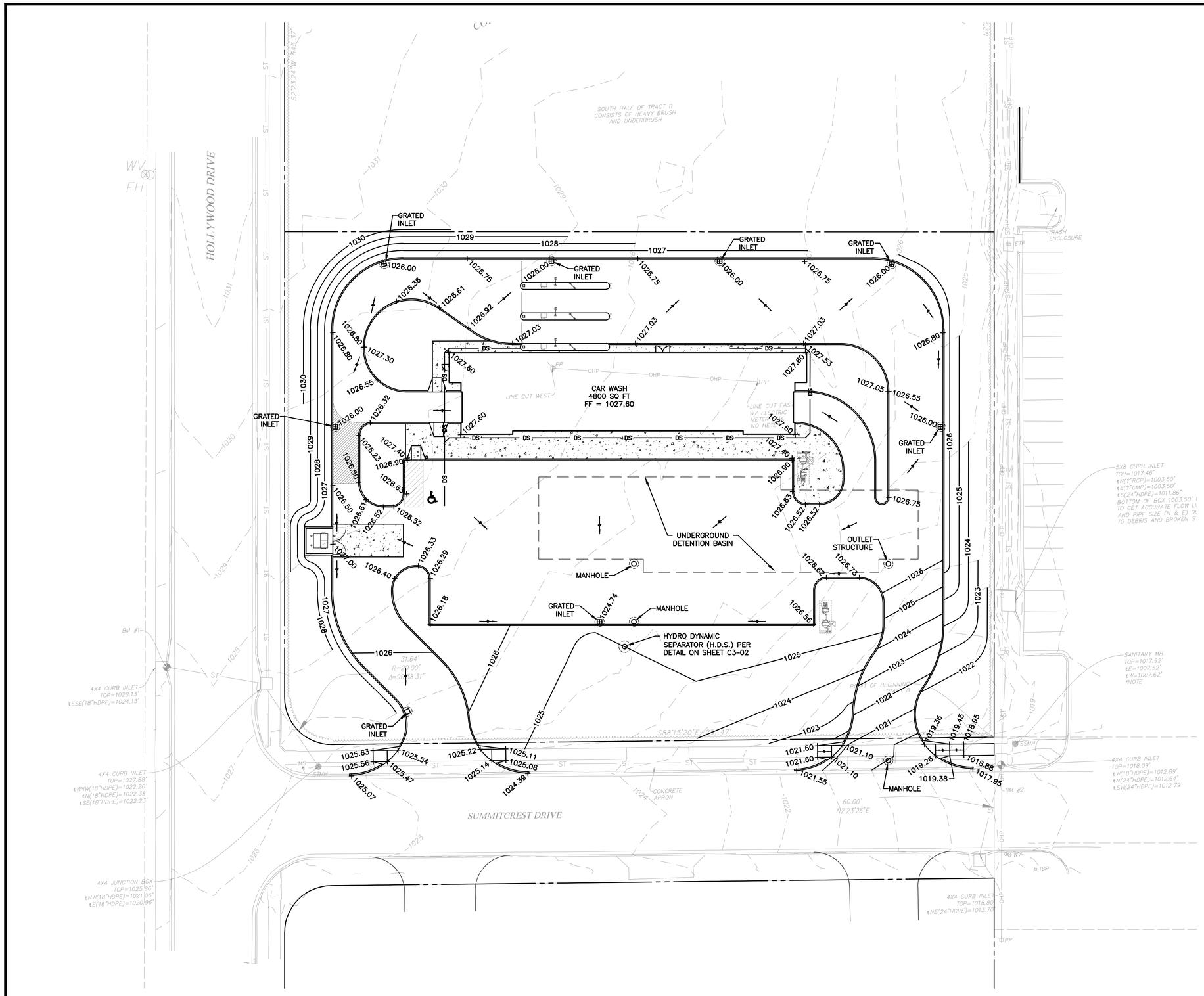

+ 679.00	PROPOSED SPOT ELEVATION
—679—	PROPOSED CONTOUR
—679—	EXISTING CONTOUR

EARTHWORK QUANTITY ESTIMATE

TOTAL CUT REQUIRED = 3185 CY

EARTHWORK QUANTITY ESTIMATES ARE FOR REFERENCE ONLY. NO SHRINK OR FILL HAS BEEN INCORPORATED, NO UTILITY CUTS HAVE BEEN INCORPORATED. CONTRACTOR SHALL CALCULATE THEIR OWN EARTHWORK QUANTITIES. MB ENGINEERING, INC. ASSUMES NO LIABILITY FOR THESE ESTIMATES

GRADING NOTES:

1. TOP SOIL SHALL BE STRIPPED FROM ALL CUT AND FILL AREAS, STOCKPILED AND REDISTRIBUTED OVER GRADED AREAS. PROVIDE EROSION AND SEDIMENTATION CONTROLS AROUND STOCKPILES DURING CONSTRUCTION.
2. TILL SOIL TO A DEPTH OF 4" MINIMUM.
3. REMOVE ALL ROCKS LARGER THAN 1" MEASURED IN LARGEST DIRECTION.
4. GRADE ALL AREAS TO MAINTAIN POSITIVE SLOPE AWAY FROM BUILDING.
5. ALL GRADED AREAS TO RECEIVE SEED OR SOD, TOP SOIL, STRAW AND WATER UNTIL A HEALTHY STAND OF GRASS IS OBTAINED.

LAWN SEEDING & SODDING NOTES

1. ALL LAWNS FROM FACE OF THE BUILDING AND ON THE SIDE WHERE THERE IS PARKING OR A STREET ARE REQUIRED TO BE FULLY SODDED. ALL OTHER LANDSCAPE AREAS TO RECEIVE SEED.
2. AREAS TO RECEIVE SEED OR SOD SHALL BE CLEAN OF DEBRIS AND FREE OF WEEDS.
3. SEED MIX TO BE DROUGHT TOLERANCE FESCUE OR REGIONAL SPECIFIC BLEND. 1/4 TO 1/3 OF THE SEED MIXTURE TO BE ANNUAL RYE TO AIDE IN LIMITING EROSION OF PERENNIAL SEED DURING GERMINATION
4. STRAW SHALL BE THRESHED STRAW OF HAY, OATS, WHEAT, BARLEY, OR RYE. SPREAD AT A RATE OF 2 ½ TONS PER ACRE. STRAW, NETTING, AND OTHER ANTI-EROSION MATERIALS TO BE REMOVED AFTER ESTABLISHED LAWN.
5. MAINTENANCE SHALL BEGIN IMMEDIATELY AFTER SEEDING. WATER REGULARLY TO KEEP LAWN AREAS MOIST TO MAXIMIZE GERMINATION AND MAINTAIN OPTIMUM GROWTH AND SURVIVAL TO ACHIEVE AN ACCEPTABLE STAND OF ESTABLISHED LAWN PRIOR TO THE STORE POSSESSION DATE, FREE OF ERODED OR BARE AREAS.

NOTES:

1. UNDERGROUND FACILITIES, STRUCTURES AND UTILITIES HAVE BEEN PLOTTED FROM AVAILABLE SURVEYS AND RECORDS AND THEREFORE THEIR LOCATIONS MUST BE CONSIDERED APPROXIMATE ONLY. IT IS POSSIBLE THAT THERE MAY BE OTHER, THE EXISTENCE OF WHICH IS PRESENTLY NOT KNOWN OR SHOWN. IT IS THE CONTRACTORS RESPONSIBILITY TO DETERMINE THEIR EXISTENCE AND EXACT LOCATION BEFORE EXCAVATION OR TRENCHING TO AVOID DAMAGE THERETO.
2. THE CONTRACTOR SHALL TAKE ALL NECESSARY PRECAUTIONS NOT TO DAMAGE ANY EXISTING SITE FEATURES TO REMAIN. IF ANY DAMAGE OCCURS, THE CONTRACTOR SHALL CONTACT THE OWNERS REPRESENTATIVE IMMEDIATELY. THE CONTRACTOR SHALL REPAIR ALL DAMAGED ITEMS TO THE SATISFACTION OF THE OWNER AT NO ADDITIONAL COST.
3. THE CONTRACTOR WILL PROVIDE SEDIMENTATION AND EROSION CONTROL DEVISES SUCH AS STRAW BALE, SILT FENCES, ETC. AT ALL DOWNSLOPE LOCATIONS AND AROUND ALL STORM WATER INLETS. CONTRACTOR SHALL INSPECT SUCH CONTROLS AFTER EACH RAINFALL EVENT AND REPLACED AS REQUIRED.
4. SILTATION CONTROL DEVICES TO REMAIN IN PLACE UNTIL ADEQUATE VEGETATIVE GROWTH INSURES NO FURTHER EROSION OF THE SOIL.
5. ALL ELEVATION ARE BASED ON U.S.G.S. DATUM
6. PROPOSED CONTOURS SHOWN ARE FINISHED ELEVATIONS ON PAVED AREAS.
7. SEE SHEET C2-03 FOR UTILITY PLAN

GRAPHIC SCALE

20 0 10 20 40 80

(IN FEET)
1 INCH = 20 FT.

MB Engineering, Inc.
606 Ryan Drive
Energy, IL 62933
(314) 368-3040

STATE OF MISSOURI
MICHAEL A. BUESCHER
NUMBER E-2001018714
REGISTERED PROFESSIONAL ENGINEER
7/25/23

Michael A. Buescher, P.E. Civil Engineering
Missouri P.E. E-2001018714

MB Engineering, Inc. Missouri Authority No. E-2015041404

The Professional Engineer's seal affixed to this sheet indicates that the named Engineer has prepared or directed the preparation of the material shown only on this sheet. Other drawings and documents not exhibiting this seal shall not be considered prepared by or the responsibility of the undersigned.

PROJECT REVISION:

NO:	DATE:	DESCRIPTION:
1	11-21-22	FOR REVIEW
2	05-16-23	CITY COMMENTS
3	07-11-23	CITY COMMENTS
4	07-25-23	CITY COMMENTS

3601 SW Hollywood Dr.

Lee's Summit, MO 64082

DATE: 11-21-22
DRAFTED BY: KB
APPRVD. BY: MB

SHEET TITLE:
GRADING PLAN

SHEET NUMBER:
C2-02

PROJECT NO: 22-752

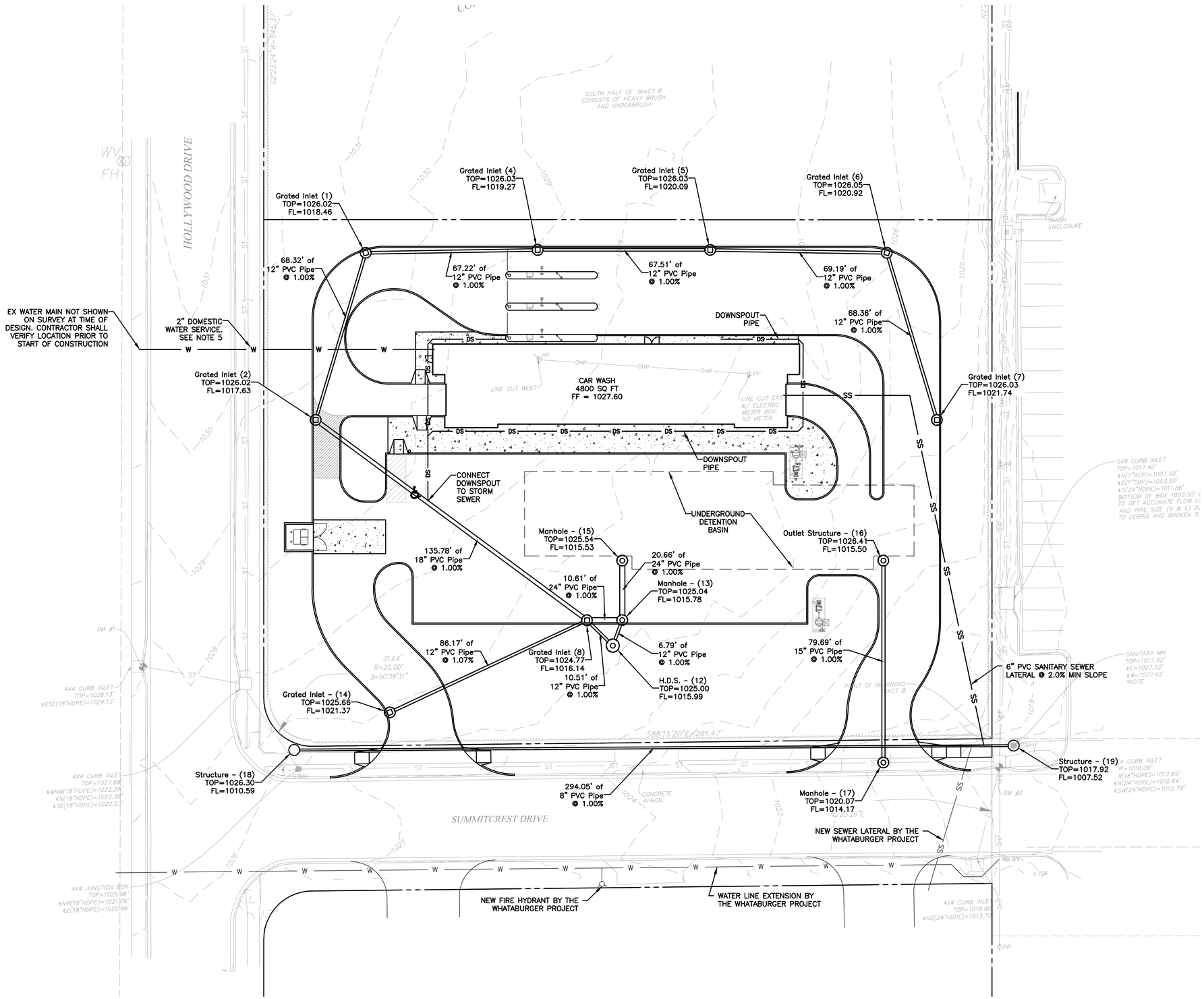

NOTES:

1. UNDERGROUND FACILITIES, STRUCTURES AND UTILITIES HAVE BEEN PLOTTED FROM AVAILABLE SURVEYS AND RECORDS AND THEREFORE THEIR LOCATIONS MUST BE CONSIDERED APPROXIMATE ONLY. IT IS POSSIBLE THAT THERE MAY BE OTHER, THE EXISTENCE OF WHICH IS PRESENTLY NOT KNOWN OR SHOWN. IT IS THE CONTRACTORS RESPONSIBILITY TO DETERMINE THEIR EXISTENCE AND EXACT LOCATION BEFORE EXCAVATION OR TRENCHING TO AVOID DAMAGE THERETO.
2. ALL DEMOLITION DEBRIS SHALL BE REMOVED FROM THE SITE AND PROPERLY DISPOSED OF ACCORDING TO ALL FEDERAL, STATE, AND LOCAL REGULATIONS.
3. THE CONTRACTOR SHALL TAKE ALL NECESSARY PRECAUTIONS NOT TO DAMAGE ANY EXISTING SITE FEATURES TO REMAIN. IF ANY DAMAGE OCCURS, THE CONTRACTOR SHALL CONTACT THE OWNERS REPRESENTATIVE IMMEDIATELY. THE CONTRACTOR SHALL REPAIR ALL DAMAGED ITEMS TO THE SATISFACTION OF THE OWNER AT NO ADDITIONAL COST.
4. SANITARY SEWER SERVICE: NEW SANITARY SEWER LATERAL SHALL BE A 6" PVC @ 2% MINIMUM SLOPE. CONTRACTOR SHALL COORDINATE WITH GOVERNING SEWER COMPANY ON CONNECTING TO SEWER MAIN.
5. THE CONTRACTOR SHALL COORDINATE WITH THE GOVERNING WATER COMPANY THE SIZE OF EXCAVATION NECESSARY FOR INSTALLATION OF THE WATER SERVICE LINE, VALVE AND TAP. THE CONTRACTOR IS RESPONSIBLE FOR ALL EXCAVATION, BACKFILL, AND SUPPLY AND INSTALLATION OF THE VALVE BOXES AND APPROPRIATE FRAME AND COVERS FOR THE SERVICE LINE VALVE.
6. ALL UTILITY CONNECTION TO THE BUILDING ARE APPROXIMATE.
7. CONTRACTOR SHALL CALL 1-800-DIG-RITE OR MO1CALL.COM 3 DAYS BEFORE ANY EXCAVATION WORK.

GRAPHIC SCALE

20 0 10 20 40 80

(IN FEET)
1 INCH = 20 FT.

MB Engineering, Inc.
606 Ryan Drive
Energy, IL 62933
(314) 368-3040

STATE OF MISSOURI
MICHAEL A. BUESCHER
NUMBER E-2001018714
REGISTERED PROFESSIONAL ENGINEER
7/25/23

Michael A. Buescher, P.E. Civil Engineering
Missouri P.E. E-2001018714

MB Engineering, Inc. Missouri Authority No. E-2015041404

The Professional Engineer's seal affixed to this sheet indicates that the named Engineer has prepared or directed the preparation of the material shown only on this sheet. Other drawings and documents not exhibiting this seal shall not be considered prepared by or the responsibility of the undersigned.

PROJECT REVISION:

NO:	DATE:	DESCRIPTION:
1	11-21-22	FOR REVIEW
2	05-16-23	CITY COMMENTS
3	07-11-23	CITY COMMENTS
4	07-25-23	CITY COMMENTS

3601 SW Hollywood Dr.

Lee's Summit, MO 64082

DATE: 11-21-22
DRAFTED BY: KB
APPRVD. BY: MB

SHEET TITLE:
UTILITY PLAN

SHEET NUMBER:
C2-03

PROJECT NO: 22-752

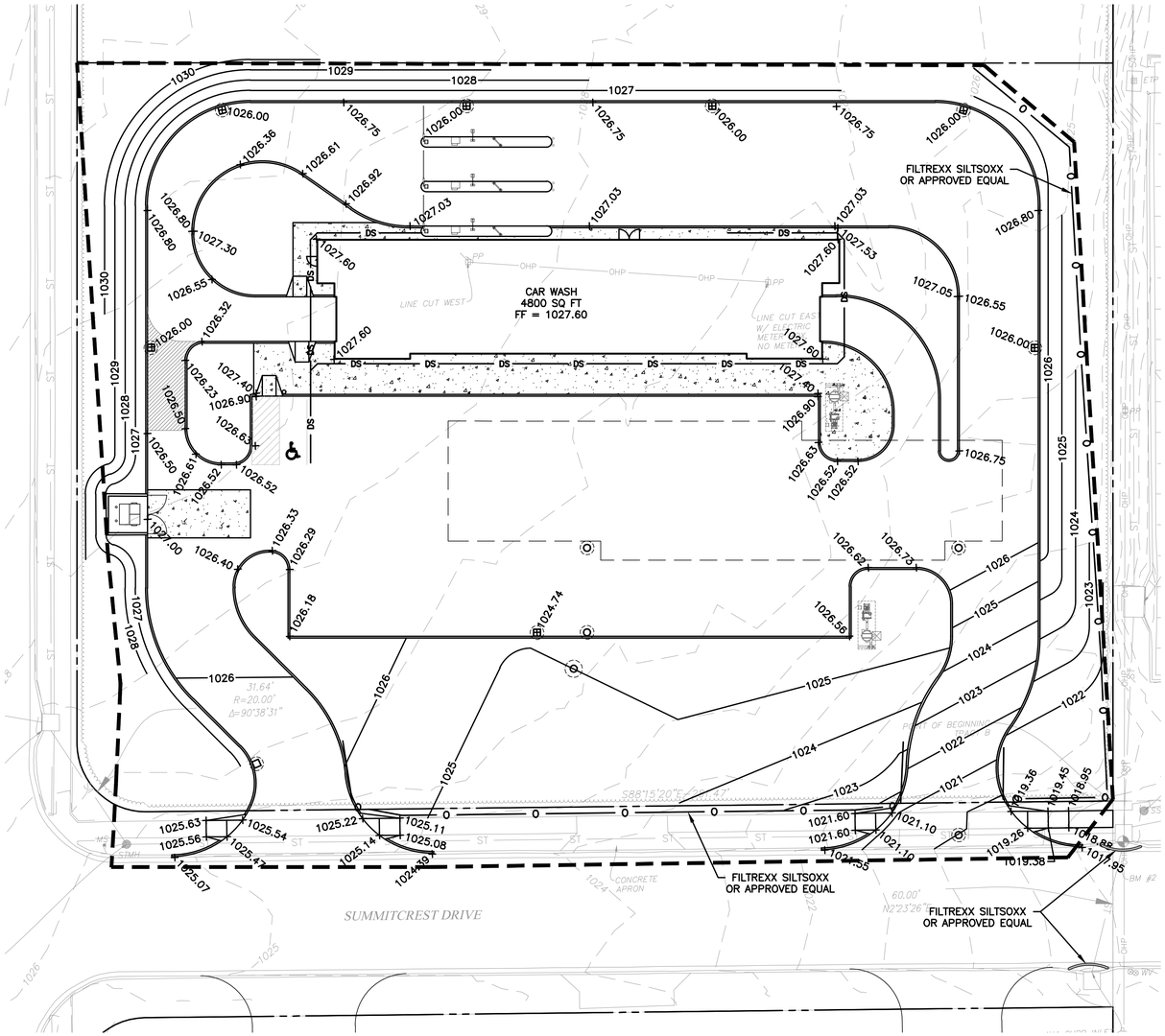

SWPPP NOTES

1. SITE OWNER:
   KC COWBOY PROPERTIES, LLC
   4640 E FM 1187
   BURLESON, TX 76028
   CONTACT: JIMMY PURSELLEY
   PH: (817) 205-8676
2. TOTAL LAND ESTIMATED TO BE DISTURBED = 1.54 ACRES ±
3. THE PERMIT HOLDER SHALL ENSURE AND/OR CONDUCT REGULAR INSPECTIONS OF LAND DISTURBANCE SITES, INCLUDING ALL EROSION AND SEDIMENT AND OTHER POLLUTANT CONTROL MEASURES, OUTFALL, AND OFFSITE RECEIVING WATERS OR SEWER SYSTEMS.
4. REGULAR INSPECTIONS MUST BE CONDUCTED AT LEAST ONCE PER WEEK. IN ADDITION, INSPECTIONS MUST BE CONDUCTED AND REPORTED WITHIN 24 HOURS OF A 1/2" RAINFALL EVENT THAT CAUSES STORM WATER RUNOFF ON SITE, AND AS RELATED TO OTHER SPECIAL LAND DISTURBANCE CONCERNS. THE PERMIT HOLDER / SITE CONTRACTOR SHALL BE RESPONSIBLE FOR ANY BMP DEFICIENCIES. BMP DEFICIENCIES MUST BE CORRECTED WITHIN SEVEN (7) CALENDAR DAYS.
5. LOCATE STATE AND COUNTY LAND DISTURBANCE PERMITS, BMP INSPECTION REPORTS, ETC. WITH THE ONSITE WITH THE SWPPP.
6. ANY LAND CLEARING, CONSTRUCTION, OR DEVELOPMENT INVOLVING THE MOVEMENT OF EARTH SHALL BE IN ACCORDANCE WITH THE STORM WATER POLLUTION PREVENTION PLAN, AND THE PERSON ISSUED A LAND DISTURBANCE PERMIT ASSUMES AND ACKNOWLEDGES RESPONSIBILITY FOR COMPLIANCE WITH THE LOCAL LAND DISTURBANCE CODE AND THE APPROVED STORM WATER POLLUTION PLAN AT THE SITE OF THE PERMITTED ACTIVITY.
7. PRIOR TO ANY MAJOR LAND DISTURBANCE ACTIVITY, A LAND DISTURBANCE PERMIT FROM THE STATE OF MISSOURI DEPARTMENT OF NATURAL RESOURCES IS REQUIRED.
8. SEDIMENT SHALL BE WASHED FROM ALL VEHICLES AT WASH DOWN STATION PRIOR TO LEAVING THE SITE. NOT TRACKING OF MUD ONTO ANY ROADS SHALL BE ALLOWED.
9. DESCRIPTION OF BMP'S (INTERIM AND PERMANENT STABILIZATION PRACTICES/SCHEDULE
   A. CONTRACTOR SHALL ESTABLISH PERIMETER SILTATION CONTROL PRIOR TO ANY CONSTRUCTION ACTIVITIES. AREAS REQUIRING MINOR CLEARING AND/OR GRADING PRIOR TO INSTALLATION OF SILTATION CONTROL SHALL BE COMPLETED IN A TIMELY MANNER AND SILTATION CONTROL ESTABLISHED IMMEDIATELY FOLLOWING.
   B. TEMPORARY CONSTRUCTION ENTRANCE SHALL BE INSTALLED WHERE THE ACCESS AREAS INTERSECT WITH PUBLIC ACCESS WAYS. DRIVERS OF VEHICLES WILL BE REQUIRED TO WASH THEIR WHEELS BEFORE ENTERING THE ROADWAY. WHERE SEDIMENT IS TRANSPORTED ONTO PUBLIC ACCESS WAYS, THE ROAD SHALL BE CLEANED THOROUGHLY AT THE END OF EACH DAY. SEDIMENT SHALL BE REMOVED FROM THE ROAD BY SHOVELING OR SWEEPING, OR OTHER APPROVED MEASURES. STREET WASHING SHALL BE ALLOWED ONLY AFTER SEDIMENT IS REMOVED IN THIS MANNER.
   C. UPON COMMENCEMENT OF INITIAL CLEARING AND GRUBBING OPERATIONS, AS WELL AS FUTURE GRADING OPERATIONS, TOPSOIL MUST BE STRIPPED FROM GRADED AREAS AND STOCKPILED FOR USE IN FINAL GRADING AND/OR EXCESS REMOVAL. THE STOCKPILES WILL BE KEPT ON SITE BUT MUST STAY CLEAR OF ALL CONSTRICTION ACTIVITY. THE STOCKPILES WILL BE STABILIZED WITH TEMPORARY VEGETATION TO PREVENT SOIL LOSS AND SEDIMENT TRANSPORT FROM THE STOCKPILE ITSELF UNTIL NEEDED. KDOT REQUIRES THAT ONE THE SITE OR A STOCKPILE IS "INACTIVE", THE SITE OR STOCKPILE WILL BE STABILIZED WITHIN 7 CALENDAR DAYS FROM DEEMING SITE OR STOCKPILE "INACTIVE".
   D. TEMPORARY ROADS SHALL FOLLOW THE CONTOUR OF THE NATURAL TERRAIN TO THE EXTENT POSSIBLE. SLOPES SHALL NOT EXCEED 10 PERCENT SLOPE.
   E. CONTRACTOR SHALL CLEAR AND GRUB THOSE AREAS OF THE SITE SCHEDULED FOR CONSTRUCTION. AREAS NOT SCHEDULED FOR IMMEDIATE CONSTRUCTION SHALL NOT BE CLEARED OF ESTABLISHED VEGETATION UNTIL REQUIRED. REMAINDER OF SITE SHALL BE GRADED, AS REQUIRED. CONTRACTOR SHALL BE RESPONSIBLE FOR INSTALLATION AND MAINTENANCE OF SILTATION CONTROL THROUGHOUT THE DURATION OF THE PROJECT.
   F. ALL PROPOSED TURF AREAS, ONCE CONSTRUCTED TO FINAL GRADES SHALL BE SEEDED/SODDED WITHIN FIVE (5) DAYS AFTER FINAL GRADING. SHOULD WEATHER CAUSE DELAYS IN EARTHWORK OPERATIONS, ADDITIONAL SILTATION CONTROL MEASURES MAY BE REQUIRED.
   G. ANY DISTURBED AREAS WHICH WILL REMAIN UNWORKED FOR 30 DAYS OR MORE SHALL BE STABILIZED WITH SEEDING AND MULCHING PER SPECIFICATIONS WITHIN FIVE (5) DAYS. IF SEASONAL CONDITIONS PROHIBIT SEEDING, MULCHING OR MATTING SHALL BE USED.
   H. INSPECTION OF SILTATION CONTROL DEVICES SHALL TAKE ONCE PLACE EVERY SEVEN DAYS AND WITHIN 24 HOURS OF ANY HEAVY RAIN EVENT. ANY SILTATION CONTROL IN NEED OF REPAIR OR REPLACEMENT SHALL OCCUR IMMEDIATELY.
   I. ALL GRADING OPERATIONS ARE SUBJECT TO THE RECOMMENDATIONS OF THE GEOTECHNICAL ENGINEERING REPORT IF ONE HAS BEEN PREPARED.
   J. SEDIMENTATION CONTROLS SHALL ONLY BE REMOVED AFTER THE SITE IS COMPLETELY STABILIZED, VEGETATION IS WELL ESTABLISHED, AND ALL PAVEMENT AREAS ARE INSTALLED.
13. PLANNED RESPONSE TO LOSS OF CONTAINED SEDIMENT
   A. BMP'S SHALL BE REPAIRED AND/OR REPLACED IMMEDIATELY, AS REQUIRED, TO STABILIZE SITE AND CONTAIN SEDIMENT LADEN RUNOFF. OFFSITE AREAS SHALL BE REVIEWED FOR EXTENT OF IMPACT FROM BMP FAILURE. PERMIT HOLDER SHALL BE REQUIRED TO PROVIDE DOCUMENTATION OF THE BMP MEASURES INSTALLED AND SCHEDULED MAINTENANCE AND REPAIRS. DOCUMENTATION OF ACTIONS AND REPORTING ARE REQUIRED TO BE PROVIDED TO THE CITY IF REQUESTED.
   B. CONTRACTOR IS RESPONSIBLE FOR INSTALLING ADDITIONAL BMP MEASURES BEYOND THOSE SHOWN IF CONDITIONS DICTATE OR CURRENT MEASURES ARE INSUFFICIENT.
14. DESCRIPTION OF PERMANENT BMP'S TO REMAIN AFTER CONSTRUCTION
   A. STORM DRAINS - THE FACILITY WILL BE SERVED BY A STORM WATER SYSTEM CONSISTING OF INLETS, MANHOLES, AND PVC PIPE. THE STORM SYSTEM WILL CONVEY STORM WATER TO AN EXISTING STORM WATER SYSTEM LOCATED AT THE NORTH OF THE PROPERTY WITHIN KDOT RIGHT-OF-WAY. THE STORM WATER SYSTEM DESIGNATED AS "PRIVATE" SHALL BE OPERATED AND MAINTAINED BY THE OWNER.
   B. TURF AREAS - TURF AREAS SHALL BE MAINTAINED TO INSURE SITE AREAS REMAIN STABILIZED UPON COMPLETION OF CONSTRUCTION ACTIVITIES.
   C. PAVED AREAS - AREAS SUBJECT TO VEHICULAR AND PEDESTRIAN TRAFFIC SHALL BE PAVED AND KEPT IN GOOD REPAIR FOLLOWING COMPLETION OF CONSTRUCTION ACTIVITIES. MAINTENANCE SHALL BE THE OWNER'S RESPONSIBILITY.
15. DESCRIPTION OF BMP'S TO PREVENT POTENTIAL POLLUTANTS (CONSTRUCTION WASTES, TOXIC OR HAZARDOUS SUBSTANCES, PETROLEUM PRODUCTS, PESTICIDES, HERBICIDES, SITE LITTER, SANITARY WASTES, ETC.)
   A. SOLID NON-HAZARDOUS CONSTRUCTION WASTE - DISPOSE OF IN TRASH DUMPSTERS OR APPROVED EQUIVALENT IN A LOCATION APPROVED BY THE OWNER. POTENTIALLY SOLUBLE OR LEACHABLE SOLID WASTE SHALL BE STORED OFF THE GROUND AND IN COVERED LEAK-PROOF CONTAINERS. SOLID WASTE SHALL BE PROPERLY DISPOSED OF OFF-SITE ON A REGULAR BASIS.
   B. HAZARDOUS WASTE - HAZARDOUS WASTE SHALL BE SEGREGATED FROM NON-HAZARDOUS CONSTRUCTION SITE DEBRIS. LIQUID OR SEMI-LIQUID HAZARDOUS WASTE SHALL BE STORED IN APPROPRIATE CONTAINERS (CLOSED DRUMS OR SIMILAR) AND SHALL BE KEPT UNDER COVER. GRANULAR, SOLUBLE OR LEACHABLE HAZARDOUS WASTE MATERIALS SHALL BE STORED OFF THE GROUND AND IN COVERED LEAK-PROOF CONTAINERS. THE OWNER SHALL APPROVE ANY HAZARDOUS WASTE STORAGE AREAS.
   C. HAZARDOUS WASTE SHALL BE PROPERLY DISPOSED OF OFFSITE ON A REGULAR BASIS BY A REPUTABLE, LICENSED HAZARDOUS WASTE HAULER.
   D. IT IS NOT THE INTENT OF THIS SWPPP TO SUPERSEDE OR REPLACE NORMAL SITE ASSESSMENT AND REMEDIATION PROCEDURES CONCERNING HAZARDOUS MATERIALS. SIGNIFICANT SPILLS AND/OR CONTAMINATION WARRANT AN IMMEDIATE RESPONSE BY TRAINED PROFESSIONALS. SUSPECTED JOB SITE CONTAMINATION SHOULD IMMEDIATELY BE REPORTED TO REGULATORY AUTHORITIES AND PROTECTIVE MEASURES TAKEN.
   E. FRESH CONCRETE WASTE AND CONCRETE EQUIPMENT WASHDOWNS SHALL BE CONTAINED AND SHALL BE STORED AWAY FROM DRAINAGE DITCHES, SWALES AND DRAINAGE STRUCTURES. WHERE APPROPRIATE, CONTAINMENT BERMS SHALL BE PLACED AROUND WASTE STORAGE AREAS.
   F. ONSITE FUELING FACILITIES ARE REQUIRED TO ADHERE TO ALL APPLICABLE FEDERAL AND STATE REGULATIONS CONCERNING STORAGE AND DISPENSERS.
   G. PROVISIONS SHALL BE MADE SO THAT A SUFFICIENT NUMBER OF TEMPORARY TOILET FACILITIES ARE AVAILABLE TO SERVE THE NUMBER OF WORKERS ONSITE.
17. THE FOLLOWING NON-STORM WATER DISCHARGES ARE AUTHORIZED BY THE EPA, PROVIDED IT HAS BEEN DETERMINED BY THE PERMITTEE THAT THEY ARE NOT SIGNIFICANT CONTRIBUTORS OF POLLUTANTS TO THE MUNICIPAL SEPARATE STORM SEWER SYSTEM. IMPLEMENTATION OF POLLUTION PREVENTION MEASURES FOR NON-STORM DISCHARGES IS REQUIRED FOR SIGNIFICANT CONTRIBUTORS:
   a. WATER LINE FLUSHING
   b. LANDSCAPE IRRIGATION
   c. DIVERTED STREAM FLOWS
   d. RISING GROUND WATERS
   e. UNCONTAMINATED GROUND WATER INFILTRATION (AS DEFINED AT 40CFR 35.2005(20))
   f. UNCONTAMINATED PUMPED GROUND WATER
   g. DISCHARGE FROM POTABLE WATER SOURCES
   h. FOUNDATION DRAINS
   i. AIR CONDITIONING CONDENSATION
   j. WATER FROM CRAWL SPACE PUMPS
   k. FOOTING DRAINS
   l. LAWN WATERING
   m. INDIVIDUAL RESIDENT CAR WASHING
   n. FLOW FROM RIPARIAN HABITATS & WETLANDS
   o. DECHLORINATED SWIMMING POOL DISCHARGE
   p. STREET WASH WATER
   q. RESIDENTIAL BUILDING WASH WATERS (WITHOUT DETERGENTS)
18. ANTICIPATED DEWATERING METHODS, SUBJECT TO CONTRACTOR'S ANTICIPATED MEANS & METHODS,:
   A. CONTRACTOR TO USE CARE WHEN PUMPING WATER FROM CONSTRUCTION EXCAVATIONS AND ATTENTION MUST BE PAID TO THE FINAL DESTINATION OF THIS WATER. SEDIMENT CONTAINED IN THE WATER MUST FIRST BE REMOVED. ONCE IT IS PUMPED OUT OF THE EXCAVATION, THIS WATER MUST THEN BE PREVENTED FROM ERODING SOIL.
   B. AN OIL/WATER SEPARATOR OR OTHER SUITABLE FILTRATION METHOD WILL BE REQUIRED PRIOR TO DISCHARGE IF THE COLLECTED WATER HAS BEEN CONTAMINATED WITH PETROLEUM PRODUCTS, OIL OR GREASE. A LICENSED TRANSPORTER WILL BE REQUIRED TO BOTH CONTAIN AND TO TRANSPORT THE COLLECTED WATER AWAY FROM THE CONSTRUCTION SITE IF IT HAS BEEN CONTAMINATED BY HAZARDOUS OR TOXIC CHEMICALS. IN THE CASE OF CONTAMINATED WATER BEING TRUCKED FROM THE CONSTRUCTION SITE, THE REQUIREMENTS OF FEDERAL, STATE AND LOCAL AGENCIES MUST BE ADHERED TO.
   C. THE DEWATERING METHODS OF EXCAVATED AREAS ANTICIPATED TO BE USED TO REMOVE WATER FROM THE CONSTRUCTION SITE ARE THE FOLLOWING:
      - BUCKET CONNECTED TO SPECIFIC PIECES OF CONSTRUCTION EQUIPMENT TO MECHANICALLY SCOOP THE WATER FROM THE EXCAVATIONS
      - PUMPING OR SIPHONING WATER FROM THE COLLECTION SITES
      - THE USE OF A GRAVITY DRAIN THROUGH CHANNELS

SWPPP CERTIFICATION

I CERTIFY UNDER PENALTY OF LAW THAT THIS STORM WATER POLLUTION PREVENTION PLAN (SWPPP) HAS BEEN PREPARED IN ACCORDANCE WITH THE REQUIREMENTS AND REGULATIONS OF THE LOCAL GOVERNING AUTHORITY AND THE MISSOURI DEPARTMENT OF NATURAL RESOURCES. TO THE BEST OF MY KNOWLEDGE AND BELIEF, THE INFORMATION CONTAINED IN THIS PLAN IS TRUE, ACCURATE, AND COMPLETE. I AM AWARE THAT THERE ARE SIGNIFICANT PENALTIES FOR SUBMITTING FALSE INFORMATION, INCLUDING THE POSSIBILITY OF FINE AND IMPRISONMENT FOR KNOWN VIOLATIONS.

SIGNATURE: M Buescher DATE: 7/4/23

GRAPHIC SCALE

20 0 10 20 40 80

(IN FEET)
1 INCH = 20 FT.

MB Engineering, Inc.
606 Ryan Drive
Energy, IL 62933
(314) 368-3040

STATE OF MISSOURI
MICHAEL A. BUESCHER
NUMBER E-2001018714
PROFESSIONAL ENGINEER
7/25/23

Michael A. Buescher, P.E. Civil Engineering
Missouri P.E. E-2001018714

MB Engineering, Inc. Missouri Authority No. E-2015041404

The Professional Engineer's seal affixed to this sheet indicates that the named Engineer has prepared or directed the preparation of the material shown only on this sheet. Other drawings and documents not exhibiting this seal shall not be considered prepared by or the responsibility of the undersigned.

PROJECT REVISION:

NO:	DATE:	DESCRIPTION:
1	11-21-22	FOR REVIEW
2	05-16-23	CITY COMMENTS
3	07-11-23	CITY COMMENTS
4	07-25-23	CITY COMMENTS

3601 SW Hollywood Dr.
Lee's Summit, MO 64082

DATE: 11-21-22
DRAFTED BY: KB
APPRVD. BY: MB

SHEET TITLE:
SWPPP

SHEET NUMBER:
C2-04

PROJECT NO: 22-752

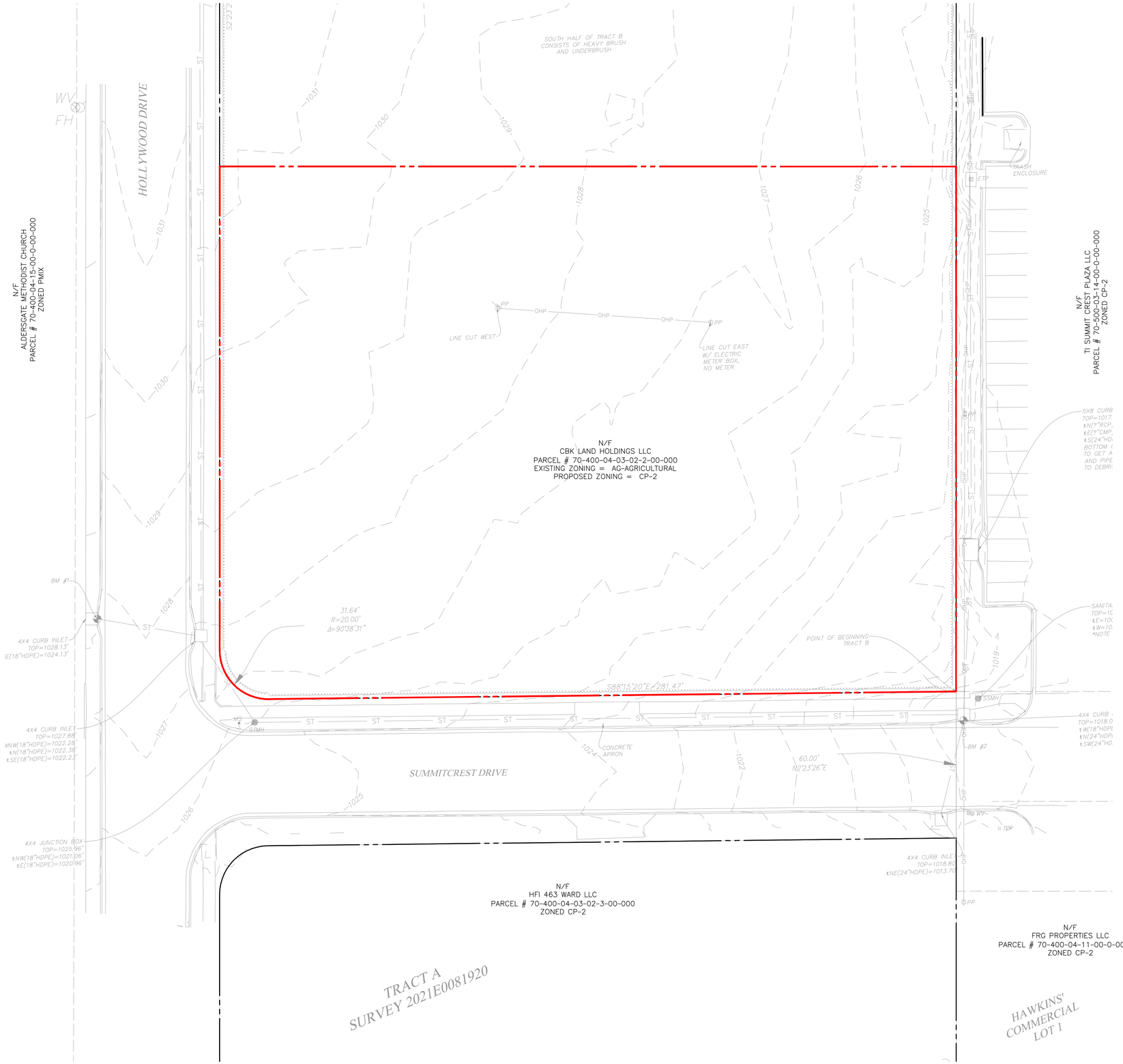

LAND DESCRIPTION AS SURVEYED

TRACT B:
PART OF THE SOUTHEAST QUARTER OF THE SOUTHEAST QUARTER OF SECTION 30, TOWNSHIP 47, RANGE 31, LEE'S SUMMIT, JACKSON COUNTY, MISSOURI, DESCRIBED AS FOLLOWS:
COMMENCING AT THE SOUTHWEST CORNER OF HAWKINS' COMMERCIAL LOT 1, RECORDED AS DOCUMENT NO. 2000I0062550, BEING ALSO THE INTERSECTION OF THE NORTH RIGHT OF WAY LINE OF MISSOURI 150 HIGHWAY AS SHOWN IN RIGHT OF WAY DEED DOCUMENT NO. 2014E0080868 AND THE EASTERLY LINE OF THE DOCUMENT RECORDED AS 1988I0875030; THENCE NORTH 02°23'26" EAST, ALONG THE WEST LINE OF SAID HAWKINS' COMMERCIAL LOT 1, A DISTANCE OF 208.16 FEET, TO THESOUTHEAST CORNER OF RIGHT OF WAY TAKEN OF SUMMITCREST DRIVE AS ESTABLISHED BY SAID RIGHT OF WAY DOCUMENT NO. 2014E0080868 AND PROLONGATION OF THE WEST LINE OF SAID HAWKINS' COMMERCIAL LOT 1; THENCE NORTH 02°23'26" EAST,A DISTANCE OF 60.00 FEET, TO THE INTERSECTION OF THE NORTH RIGHT OF WAY LINE OF SAID SUMMITCREST DRIVE AND THE EASTERLY LINE OF THE DOCUMENT RECORDED AS 1988I0875030 AND THE WEST LINE OF SUMMITCREST PLAZA LOT 1 RECORDED AS DOCUMENT NO. 2001I0010320, BEING ALSO THE TRUE POINT OF BEGINNING OF TRACT B; THENCE ALONG THE WEST LINE OF SAID SUMMITCREST PLAZA, NORTH 2°23'26" EAST, A DISTANCE OF 583.70 FEET, TO THE POINT OF INTERSECTION OF KENBRIDGECROSSING AS ESTABLISHED IN SAID RIGHT OF WAY DEED IN DOCUMENT NUMBER 2014E0080868 AND THE EASTERLY LINE OF THE SAID DOCUMENT NO. 1988I0875030, BEING ALSO SAID WEST LINE OF SUMMITCREST PLAZA; THENCE ALONG SAID RIGHT OF WAY THE FOLLOWING FIVE (5) COURSES: NORTH 87°54'56" WEST, A DISTANCE OF 281.79; THENCE ALONG A CURVE TO THE LEFT,HAVING A RADIUS OF 20.00 FEET, AN ARC LENGTH OF 31.31 FEET, AND A DELTA OF 89°41'48"; THENCE SOUTH 2°23'24" WEST,A DISTANCE OF 545.37 FEET; THENCE ALONG A CURVE TO THE LEFT, WITH A RADIUS OF 20.00 FEET, AN ARC LENGTH OF 31.64 FEET, AND A DELTA OF 90°38'31"; THENCE SOUTH 88°15'20" EAST, A DISTANCE OF 281.47 FEET, TO THE POINT OFBEGINNING. ALSO KNOWN AS TRACT B, AS SHOWN ON THE CERTIFICATE OF SURVEY RECORDED 7/27/2021 AS DOCUMENT NO. 2021E0081920 IN SURVEY BOOK 51 AT PAGE 95, AND CORRECTED BY THE AFFIDAVIT RECORDED 1/10/2022 AS DOCUMENT NO. 2022E0002897.

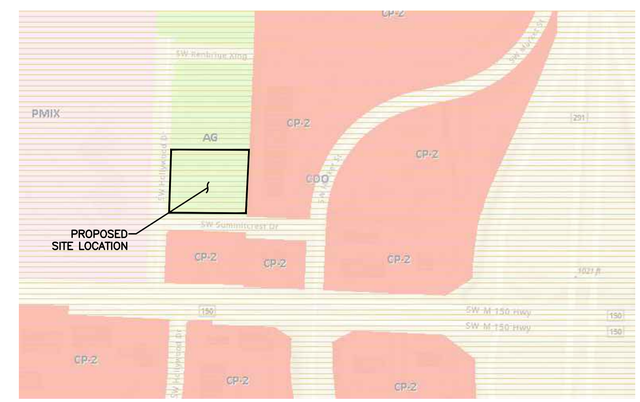

ZONING MAP
NTS

GRAPHIC SCALE

20 0 10 20 40 80

(IN FEET)
1 INCH = 20 FT.

MB Engineering, Inc.
606 Ryan Drive
Energy, IL 62933
(314) 368-3040

STATE OF MISSOURI
MICHAEL A. BUESCHER
NUMBER
E-2001018714
REGISTERED PROFESSIONAL ENGINEER
7/25/23

Michael A. Buescher, P.E. Civil Engineering
Missouri P.E. E-2001018714

MB Engineering, Inc. Missouri Authority No.
E-2015041404

The Professional Engineer's seal affixed to this sheet indicates that the named Engineer has prepared or directed the preparation of the material shown only on this sheet. Other drawings and documents not exhibiting this seal shall not be considered prepared by or the responsibility of the undersigned.

PROJECT REVISION:

NO:	DATE:	DESCRIPTION:
1	11-21-22	FOR REVIEW
2	05-16-23	CITY COMMENTS
3	07-11-23	CITY COMMENTS
4	07-25-23	CITY COMMENTS

3601 SW Hollywood Dr.

Lee's Summit, MO 64082

DATE: 11-21-22
DRAFTED BY: KB
APPRVD. BY: MB

SHEET TITLE:
SITE ZONING PLAN

SHEET NUMBER:
C2-05

PROJECT NO: 22-752

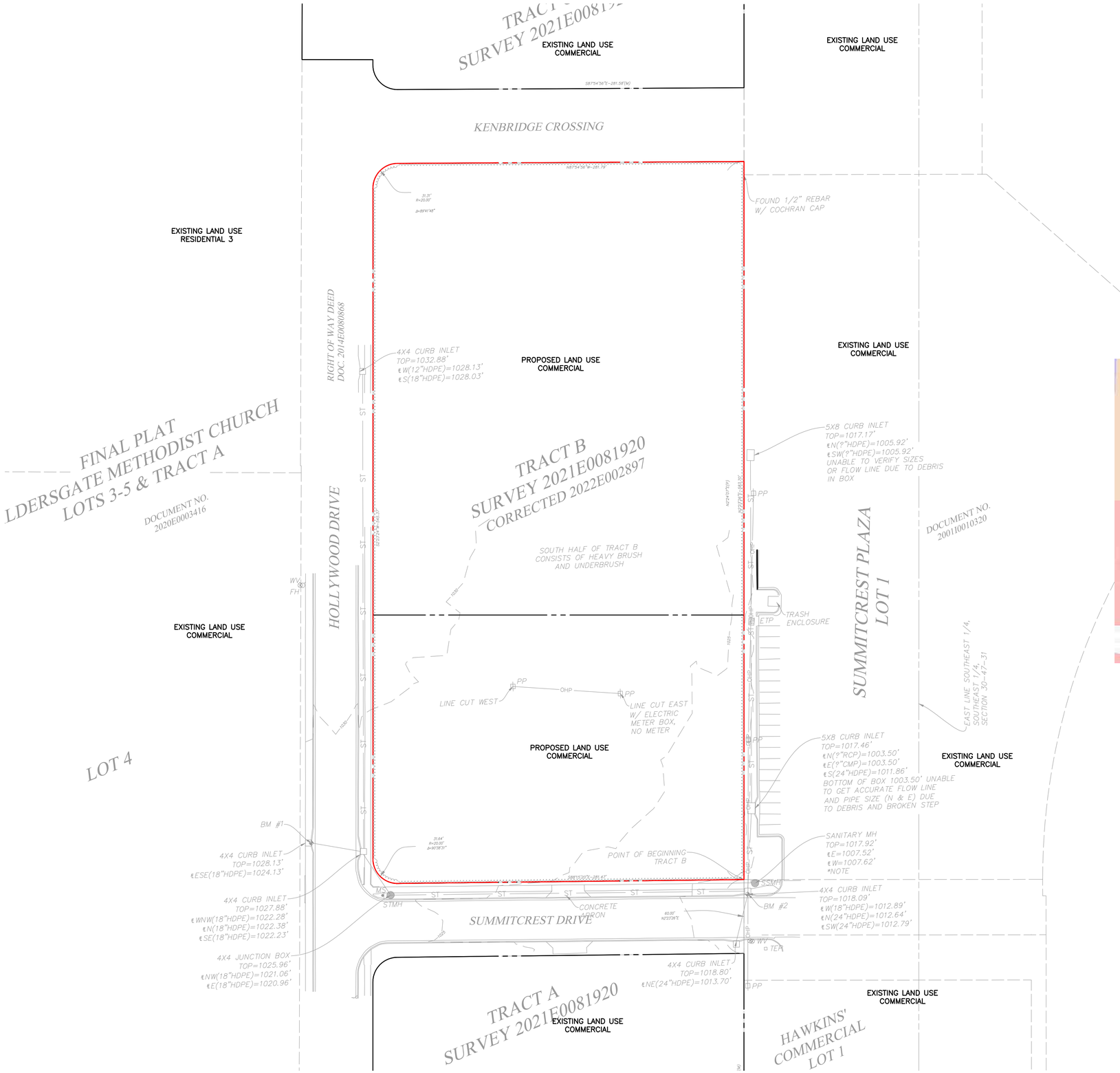

LAND DESCRIPTION AS SURVEYED

TRACT B:
PART OF THE SOUTHEAST QUARTER OF THE SOUTHEAST QUARTER OF SECTION 30, TOWNSHIP 47, RANGE 31, LEE'S SUMMIT, JACKSON COUNTY, MISSOURI, DESCRIBED AS FOLLOWS:
COMMENCING AT THE SOUTHWEST CORNER OF HAWKINS' COMMERCIAL LOT 1, RECORDED AS DOCUMENT NO. 200100062550, BEING ALSO THE INTERSECTION OF THE NORTH RIGHT OF WAY LINE OF MISSOURI 150 HIGHWAY AS SHOWN IN RIGHT OF WAY DEED DOCUMENT NO. 2014E0080868 AND THE EASTERLY LINE OF THE DOCUMENT RECORDED AS 1988I0875030; THENCE NORTH 02°23'26" EAST, ALONG THE WEST LINE OF SAID HAWKINS' COMMERCIAL LOT 1, A DISTANCE OF 208.16 FEET, TO THESOUTHEAST CORNER OF RIGHT OF WAY TAKEN OF SUMMITCREST DRIVE AS ESTABLISHED BY SAID RIGHT OF WAY DOCUMENT NO. 2014E0080868 AND PROLONGATION OF THE WEST LINE OF SAID HAWKINS' COMMERCIAL LOT 1; THENCE NORTH 02°23'26" EAST,A DISTANCE OF 60.00 FEET, TO THE INTERSECTION OF THE NORTH RIGHT OF WAY LINE OF SAID SUMMITCREST DRIVE AND THE EASTERLY LINE OF THE DOCUMENT RECORDED AS 1988I0875030 AND THE WEST LINE OF SUMMITCREST PLAZA LOT 1 RECORDED AS DOCUMENT NO. 200100010320, BEING ALSO THE TRUE POINT OF BEGINNING OF TRACT B; THENCE ALONG THE WEST LINE OF SAID SUMMITCREST PLAZA, NORTH 2°23'26" EAST, A DISTANCE OF 583.70 FEET, TO THE POINT OF INTERSECTION OF KENBRIDGECROSSING AS ESTABLISHED IN SAID RIGHT OF WAY DEED IN DOCUMENT NUMBER 2014E0080868 AND THE EASTERLY LINE OF THE SAID DOCUMENT NO. 1988I0875030, BEING ALSO SAID WEST LINE OF SUMMITCREST PLAZA; THENCE ALONG SAID RIGHT OF WAY THE FOLLOWING FIVE (5) COURSES: NORTH 87°54'56" WEST, A DISTANCE OF 281.79; THENCE ALONG A CURVE TO THE LEFT,HAVING A RADIUS OF 20.00 FEET, AN ARC LENGTH OF 31.31 FEET, AND A DELTA OF 89°41'48"; THENCE SOUTH 2°23'24" WEST,A DISTANCE OF 545.37 FEET; THENCE ALONG A CURVE TO THE LEFT, WITH A RADIUS OF 20.00 FEET, AN ARC LENGTH OF 31.64 FEET, AND A DELTA OF 90°38'31"; THENCE SOUTH 88°15'20" EAST, A DISTANCE OF 281.47 FEET, TO THE POINT OFBEGINNING. ALSO KNOWN AS TRACT B, AS SHOWN ON THE CERTIFICATE OF SURVEY RECORDED 7/27/2021 AS DOCUMENT NO. 2021E0081920 IN SURVEY BOOK 51 AT PAGE 95, AND CORRECTED BY THE AFFIDAVIT RECORDED 1/10/2022 AS DOCUMENT NO. 2022E0002897.

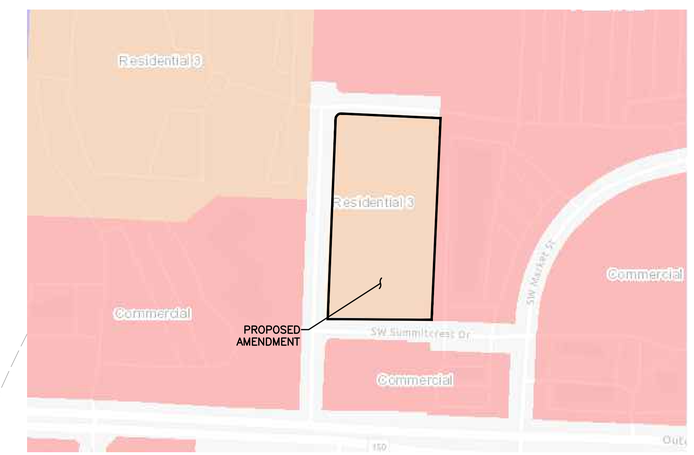

EXISTING COMPREHENSIVE PLAN
NTS

GRAPHIC SCALE
20 0 10 20 40 80
(IN FEET)
1 INCH = 20 FT.

MB Engineering, Inc.
606 Ryan Drive
Energy, IL 62933
(314) 368-3040

STATE OF MISSOURI
MICHAEL A. BUESCHER
NUMBER E-2001018714
REGISTERED PROFESSIONAL ENGINEER
7/25/23

Michael A. Buescher, P.E. Civil Engineering
Missouri P.E. E-2001018714

MB Engineering, Inc. Missouri Authority No. E-2015041404

The Professional Engineer's seal affixed to this sheet indicates that the named Engineer has prepared or directed the preparation of the material shown only on this sheet. Other drawings and documents not exhibiting this seal shall not be considered prepared by or the responsibility of the undersigned.

PROJECT REVISION:

NO:	DATE:	DESCRIPTION:
1	11-21-22	FOR REVIEW
2	05-16-23	CITY COMMENTS
3	07-11-23	CITY COMMENTS
4	07-25-23	CITY COMMENTS

3601 SW Hollywood Dr.
Lee's Summit, MO 64082

DATE: 11-21-22
DRAFTED BY: KB
APPRVD. BY: MB

SHEET TITLE:
COMPREHENSIVE PLAN

SHEET NUMBER:
C2-06

PROJECT NO: 22-752

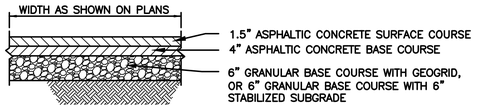

ASPHALT

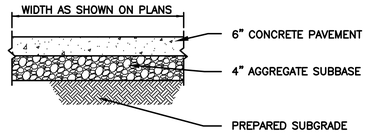

CONCRETE ALTERNATE

A LIGHT DUTY PAVEMENT
NOT TO SCALE

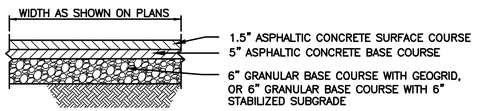

ASPHALT

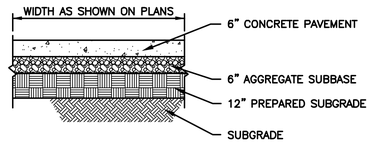

CONCRETE ALTERNATE

B HEAVY DUTY PAVEMENT
NOT TO SCALE

** CONTRACTOR TO VERIFY PAVEMENT SECTION IS CAPABLE OF SUPPORTING 75,000-POUND IMPOSED LOADS OF A FIRE APPARATUS

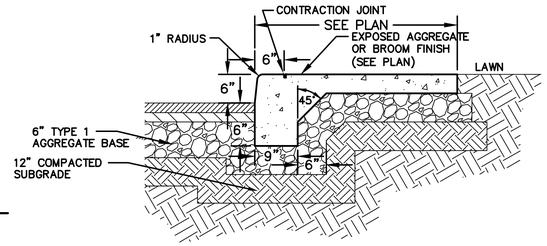

NOTES:

1. EXPANSION JOINTS SHALL BE PLACED AT 30' SPACING, TANGENT POINTS AT RADII, AND OTHER LOCATIONS AS INDICATED.
2. CONTRACTION JOINTS SHALL BE SPACED AT ±5' OR THE WIDTH OF THE WALK. CONTRACTION JOINTS SHALL BE TOOLED.

C MONOLITHIC CURB AND SIDEWALK DETAIL
NOT TO SCALE

GENERAL NOTES

1. DO NOT SCALE DRAWING. FOLLOW DIMENSIONS.
2. SILTATION CONTROL DEVICES TO REMAIN IN PLACE FURTHER EROSION OF THE SOIL.
3. SILTATION FENCES SHALL BE INSPECTED PERIODICALLY FOR DAMAGE AND FOR THE AMOUNT OF SEDIMENTATION WHICH HAS ACCUMULATED. REMOVAL OF SEDIMENT WILL BE REQUIRED WHEN IT REACHES 1/2 OF THE HEIGHT OF THE SILTATION FENCE.
4. ATTACHMENT OF WELDED WIRE FENCE AND GEOTEXTILE FABRIC TO BE IN ACCORDANCE WITH THE MANUFACTURER'S RECOMMENDATION.

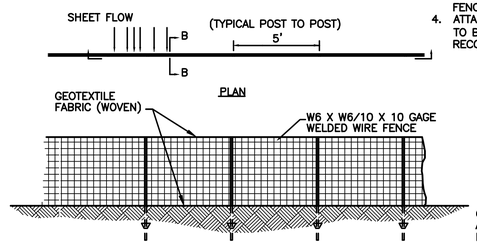

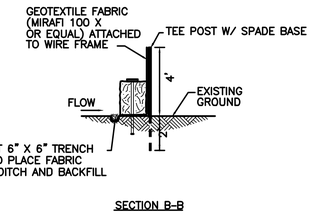

D SILTATION FENCE
NOT TO SCALE

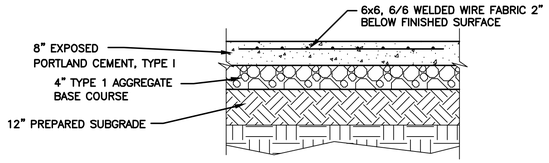

E CONCRETE PAD DETAIL
NOT TO SCALE

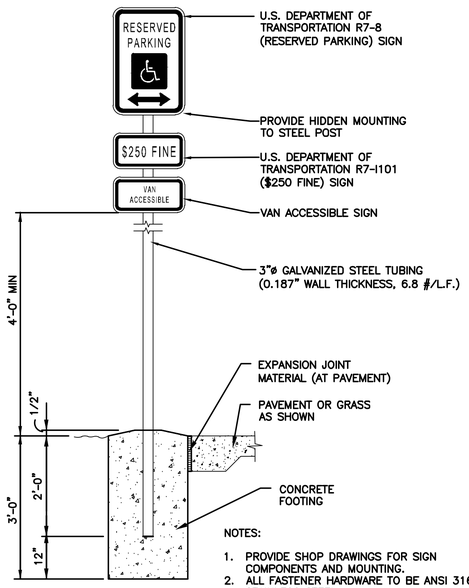

NOTES:

1. PROVIDE SHOP DRAWINGS FOR SIGN COMPONENTS AND MOUNTING.
2. ALL FASTENER HARDWARE TO BE ANSI 316 STAINLESS STEEL.
3. ALL SIGNS TO BE 18 GUAGE PRIMED AND PAINTED WITH BAKED ENAMEL AND SCREEN PRINTED.

F ACCESSIBLE PARKING SIGN
NOT TO SCALE

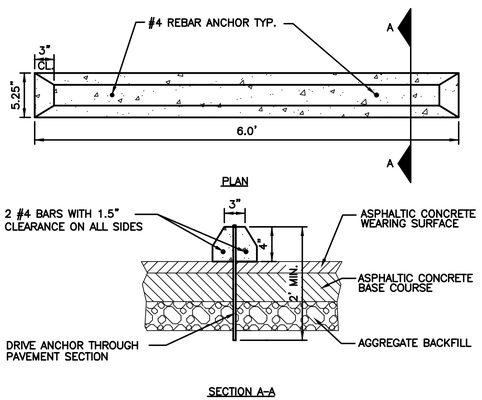

G WHEEL STOP DETAIL
NOT TO SCALE

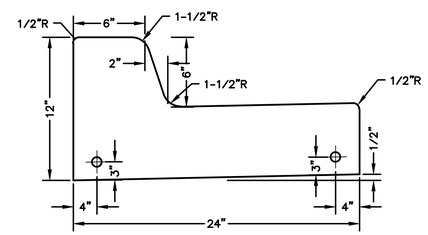

NOTES:

1. 1/2" EXPANSION JOINTS WITH 2' DOWELS SHALL BE PLACED AT RADIUS POINTS AND 150' INTERVALS. THESE DOWELS SHALL BE GREASED AND WRAPPED ON ONE END WITH EXPANSION TUBES.
2. 1" DEEP CONTRACTION JOINTS SHALL BE INSTALLED AT APPROXIMATELY 10' INTERVALS. THESE JOINTS SHALL PASS ACROSS THE ENTIRE CURB SECTION
3. FIX DOWELS WITH BAR SUPPORTS.
4. CONCRETE SHALL CONFORM TO SECTION 2200 UNLESS OTHERWISE SPECIFIED IN PLANS PROJECT MANUAL. FOR CBD OF K.C.MO. SEE SECTION 2300 OF STANDARD SPECIFICATIONS AND DESIGN CRITERIA.
5. USE 5/8" DIAMETER BY SMOOTH DOWELS AT LOCATIONS SHOWN ON EACH TYPICAL SECTION
6. DEPTH OF GUTTER SHALL BE A MINIMUM OF 8" THRU THE HANDICAP ACCESS RAMP
7. ONLY WITHE CURING MEMBRANES SHALL BE PERMITTED AND SHALL CONFORM TO STANDARD SPECIFICATION SECTION 2200

H STRAIGHT BACK CURB & GUTTER
NOT TO SCALE

MB Engineering, Inc.
606 Ryan Drive
Energy, IL 62933
(314) 368-3040

STATE OF MISSOURI
MICHAEL A. BUESCHER
NUMBER E-2001018714
REGISTERED PROFESSIONAL ENGINEER
7/25/23

Michael A. Buescher, P.E. Civil Engineering
Missouri P.E. E-2001018714

MB Engineering, Inc. Missouri Authority No. E-2015041404

The Professional Engineer's seal affixed to this sheet indicates that the named Engineer has prepared or directed the preparation of the material shown only on this sheet. Other drawings and documents not exhibiting this seal shall not be considered prepared by or the responsibility of the undersigned.

PROJECT REVISION:

NO:	DATE:	DESCRIPTION:
1	11-21-22	FOR REVIEW
2	05-16-23	CITY COMMENTS
3	07-11-23	CITY COMMENTS
4	07-25-23	CITY COMMENTS

3601 SW Hollywood Dr.
Lee's Summit, MO 64082

DATE: 11-21-22
DRAFTED BY: KB
APPRVD. BY: MB

SHEET TITLE:
TYPICAL DETAILS

SHEET NUMBER:
C3-01

PROJECT NO: 22-752

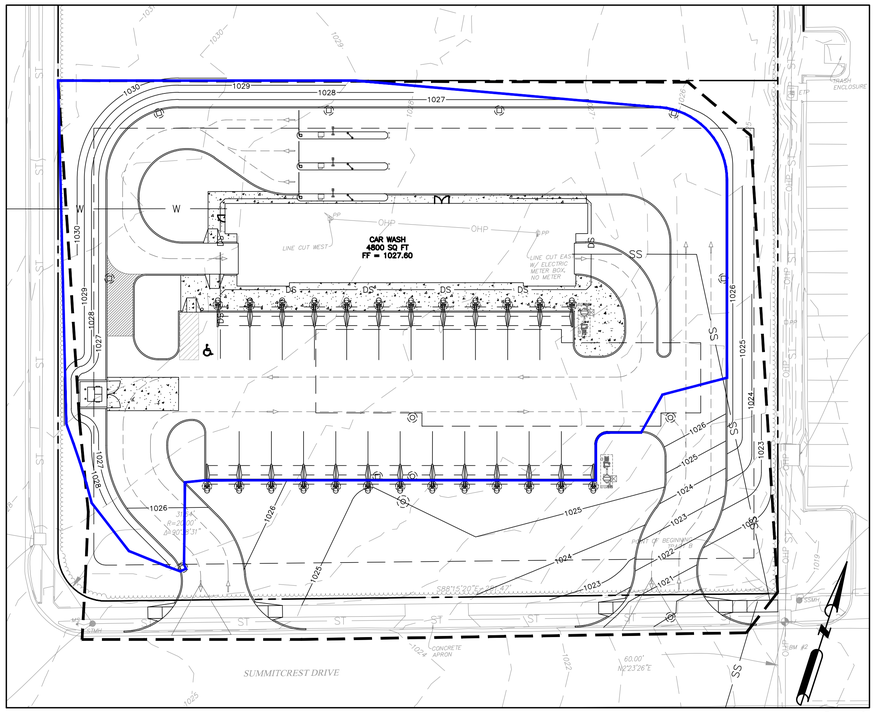

TOTAL AREA TO BE TREATED BY HYDRO-DYNAMIC SEPARATOR

37,832.58 SQ FT (0.869 ACRES) OF IMPERVIOUS AREA
6,939.20 SQ FT (0.159 ACRES) OF PERVIOUS AREA
44,771.78 SQ FT (1.028 ACRES) OF TOTAL AREA
0.869 / 1.028 = 84.5% IMPERVIOUS

HYDRO-DYNAMIC SEPARATOR

WATER QUALITY VOLUME $WQ_V = (P\ R_V\ A) / 12$

P = 1.14 INCHES
A = 1.03 ACRES 0.00147 SQ MILES
I = 84.5 PERCENT
R_V = .05 + 0.009(I)
= 0.811
WQ_V = 0.079 ACRE-FT = 3448 FT^3

RUNOFF VOLUME

Q_a = 0.92 WATERSHED INCHES
CN = 1000 / [10 + 5P + 10Q_A - 10 * (SQRT(Q_A2 + 1.25 * Q_A * P))]
= 97.97

USING

Tc = 6 MINUTES = 0.1 HOURS
I_a = (200/CN)-2
= 0.041
I_a/P = 0.036
q_u = 990 CSM/IN. (FROM TR-55 EXHIBIT 4-II)
Q_p = q_u * A * Q_a
= 1.469 CFS 1.469 < 3.0 OK
(MAX ALLOWABLE TREATMENT FLOW FOR A 6' CONTECH CDS = 3.0 CFS)

FLOW SPITTER DESIGN

Q_p = c * A (SQRT(64.4 * H_o))
H_o = (Q_p/c * A)2 / 64.4
c = 0.8
A = 0.785 12" PIPE
H_o = 0.151
h = 0.15 + D/2
= 0.65 FEET

THEREFORE SET THE LINE OF THE BYPASS PIPE AT 1016.24 + 0.65 = 1016.89

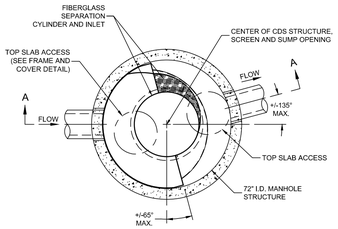

PLAN VIEW
N.T.S.

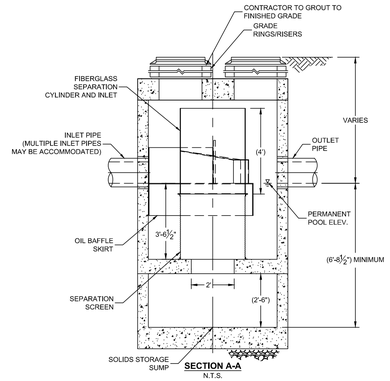

SECTION A-A
N.T.S.

CDS3030 DESIGN NOTES
CDS3030 RATED TREATMENT CAPACITY IS 3.0 CFS, OR PER LOCAL REGULATIONS. MAXIMUM HYDRAULIC INTERNAL BYPASS CAPACITY IS 20.0 CFS. IF THE SITE CONDITIONS EXCEED 20.0 CFS, AN UPSTREAM BYPASS STRUCTURE IS REQUIRED.
THE STANDARD CDS3030 CONFIGURATION IS SHOWN. ALTERNATE CONFIGURATIONS ARE AVAILABLE AND ARE LISTED BELOW. SOME CONFIGURATIONS MAY BE COMBINED TO SUIT SITE REQUIREMENTS.

DESIGNATION (MODEL SUFFIX)	CONFIGURATION DESCRIPTION
G	GRATED INLET ONLY (NO INLET PIPE)
GP	GRATED INLET WITH INLET PIPE OR PIPES
K	CURB INLET ONLY (NO INLET PIPE)
KP	CURB INLET WITH INLET PIPE OR PIPES
B	SEPARATE OIL BAFFLE (SINGLE INLET PIPE REQUIRED FOR THIS CONFIGURATION)
W	SEDIMENT WEIR FOR NJDEP / NJCAT CONFORMING UNITS

FRAME AND COVER
(DIAMETER VARIES)
N.T.S.

HYDRO-DYNAMIC SEPARATOR

SITE SPECIFIC DATA REQUIREMENTS

STRUCTURE ID			HDS - (12)
WATER QUALITY FLOW RATE (CFS)			1.469
PEAK FLOW RATE (CFS)			1.469
RETURN PERIOD OF PEAK FLOW (YRS)			15
SCREEN APERTURE (2400 OR 4700)			2400
PIPE DATA:	I.E.	MATERIAL	DIAMETER
INLET PIPE 1	1015.99	PVC	12"
INLET PIPE 2	*	*	*
OUTLET PIPE	1015.99	PVC	12"
RIM ELEVATION			1025.00
ANTI-FLOTATION BALLAST	WIDTH		HEIGHT
	*		*
NOTES/SPECIAL REQUIREMENTS:			
* PER ENGINEER OF RECORD			

GENERAL NOTES
1. CONTECH TO PROVIDE ALL MATERIALS UNLESS NOTED OTHERWISE.
2. DIMENSIONS MARKED WITH ( ) ARE REFERENCE DIMENSIONS. ACTUAL DIMENSIONS MAY VARY.
3. FOR FABRICATION DRAWINGS WITH DETAILED STRUCTURE DIMENSIONS AND WEIGHTS, PLEASE CONTACT YOUR CONTECH STORMWATER SOLUTIONS REPRESENTATIVE. www.contechstormwater.com
4. CDS WATER QUALITY STRUCTURE SHALL BE IN ACCORDANCE WITH ALL DESIGN DATA AND INFORMATION CONTAINED IN THIS DRAWING.
5. STRUCTURE AND CASTINGS SHALL MEET AASHTO HS20 LOAD RATING.

INSTALLATION NOTES
1. ANY SUB-BASE, BACKFILL DEPTH, AND/OR ANTI-FLOTATION PROVISIONS ARE SITE-SPECIFIC DESIGN CONSIDERATIONS AND SHALL BE SPECIFIED BY ENGINEER OF RECORD.
2. CONTRACTOR TO PROVIDE EQUIPMENT WITH SUFFICIENT LIFTING AND REACH CAPACITY TO LIFT AND SET THE CDS MANHOLE STRUCTURE (LIFTING CLUTCHES PROVIDED).
3. CONTRACTOR TO ADD JOINT SEALANT BETWEEN ALL STRUCTURE SECTIONS, AND ASSEMBLE STRUCTURE.
4. CONTRACTOR TO PROVIDE, INSTALL, AND GROUT PIPES. MATCH PIPE INVERTS WITH ELEVATIONS SHOWN.
5. CONTRACTOR TO TAKE APPROPRIATE MEASURES TO ASSURE UNIT IS WATER TIGHT, HOLDING WATER TO FLOWLINE INVERT MINIMUM. IT IS SUGGESTED THAT ALL JOINTS BELOW PIPE INVERTS ARE GROUTED.

PART 1 - GENERAL

1.1 DESCRIPTION

A. SCOPE

THE CONTRACTOR SHALL FURNISH ALL LABOR, EQUIPMENT AND MATERIALS NECESSARY TO INSTALL THE STORMWATER TREATMENT DEVICE(S) (SWTD) AND APPURTENANCES SPECIFIED IN THE DRAWINGS AND THESE SPECIFICATIONS.

1.2 QUALITY ASSURANCES

A. INSPECTION

ALL COMPONENTS SHALL BE SUBJECT TO INSPECTION BY THE ENGINEER AT THE PLACE OF MANUFACTURE AND/OR INSTALLATION. ALL COMPONENTS ARE SUBJECT TO BE REJECTED OR IDENTIFIED FOR REPAIR IF THE QUALITY OF MATERIALS AND MANUFACTURING DO NOT COMPLY WITH THE REQUIREMENTS OF THIS SPECIFICATION. COMPONENTS WHICH HAVE BEEN IDENTIFIED AS DEFECTIVE MAY BE SUBJECT FOR REPAIR. FINAL ACCEPTANCE OF THE COMPONENT IS CONTINGENT UPON THE DISCRETION OF THE ENGINEER.

B. WARRANTY

THE MANUFACTURER SHALL GUARANTEE THE SWTD COMPONENTS AGAINST ALL MANUFACTURER ORIGINATED DEFECTS IN MATERIALS OR WORKMANSHIP FOR A PERIOD OF TWELVE (12) MONTHS FROM THE DATE THE COMPONENTS ARE DELIVERED TO THE OWNER FOR INSTALLATION. THE MANUFACTURER SHALL BE NOTIFIED OF REPAIR/REPLACEMENT ISSUES IN WRITING WITHIN THE REFERENCED WARRANTY PERIOD. THE MANUFACTURER SHALL, UPON ITS DETERMINATION OF REPAIR, CORRECT OR REPLACE ANY MANUFACTURER ORIGINATED DEFECTS IDENTIFIED BY WRITTEN NOTICE WITHIN THE REFERENCED WARRANTY PERIOD. THE USE OF SWTD COMPONENTS SHALL BE LIMITED TO THE APPLICATION FOR WHICH IT WAS SPECIFICALLY DESIGNED.

C. MANUFACTURER'S PERFORMANCE CERTIFICATE

THE SWTD MANUFACTURER SHALL SUBMIT TO THE ENGINEER OF RECORD A "MANUFACTURER'S PERFORMANCE CERTIFICATION" CERTIFYING THAT EACH SWTD IS CAPABLE OF ACHIEVING THE SPECIFIED REMOVAL EFFICIENCIES AS LISTED IN THESE SPECIFICATIONS. THE CERTIFICATION SHALL BE SUPPORTED BY INDEPENDENT THIRD-PARTY RESEARCH.

1.3 SUBMITTALS

A. SHOP DRAWINGS

THE CONTRACTOR SHALL PREPARE AND SUBMIT SHOP DRAWINGS IN ACCORDANCE WITH THE CONTRACT DOCUMENTS. THE SHOP DRAWINGS SHALL DETAIL HORIZONTAL AND VERTICAL DIMENSIONING, REINFORCEMENT AND JOINT TYPE AND LOCATIONS.

PART 2 - PRODUCTS

2.1 MATERIALS AND DESIGN

A. PRECAST CONCRETE COMPONENTS

PRECAST CONCRETE COMPONENTS SHALL CONFORM TO APPLICABLE SECTIONS OF ASTM C 478, ASTM C 857 AND ASTM C 858 AND THE FOLLOWING:

1. CONCRETE SHALL ACHIEVE A MINIMUM 28-DAY COMPRESSIVE STRENGTH OF 4,000 POUNDS PER SQUARE-INCH (PSI);
2. UNLESS OTHERWISE NOTED, THE PRECAST CONCRETE SECTIONS SHALL BE DESIGNED TO WITHSTAND LATERAL EARTH AND AASHTO H-20 TRAFFIC LOADS;
3. CEMENT SHALL CONFORM TO ASTM C 150;
4. AGGREGATES SHALL CONFORM TO ASTM C 33;
5. REINFORCING STEEL SHALL BE DEFORMED BILLET-STEEL BARS, WELDED STEEL WIRE OR DEFORMED WELDED STEEL WIRE CONFORMING TO ASTM A 615, A 185 OR A 497, RESPECTIVELY;
6. JOINTS SHALL BE SEALED WITH PREFORMED JOINT SEALING COMPOUND CONFORMING TO ASTM C 990 AND
7. SHIPPING OF COMPONENTS SHALL NOT BE INITIATED UNTIL A MINIMUM COMPRESSIVE STRENGTH OF 4,000 PSI IS ATTAINED OR FIVE (5) CALENDAR DAYS AFTER FABRICATION HAS EXPIRED, WHICHEVER OCCURS FIRST.

B. INTERNAL COMPONENTS AND APPURTENANCES

INTERNAL COMPONENTS AND APPURTENANCES SHALL CONFORM TO THE FOLLOWING:

1. SCREEN AND SUPPORT STRUCTURE SHALL BE MANUFACTURED OF TYPE 316 AND 316L STAINLESS STEEL CONFORMING TO ASTM F 1267-01;
2. HARDWARE SHALL BE MANUFACTURED OF TYPE 316 STAINLESS STEEL CONFORMING TO ASTM A 320;
3. FIBERGLASS COMPONENTS SHALL CONFORM TO THE NATIONAL BUREAU OF STANDARDS PS-15 AND COATED WITH AN ISOPHALIC POLYESTER GELCOAT AND
4. ACCESS SYSTEM(S) CONFORM TO THE FOLLOWING:
   A. MANHOLE CASTINGS SHALL BE DESIGNED TO WITHSTAND AASHTO H-20 LOADINGS AND MANUFACTURED OF CAST-IRON CONFORMING TO ASTM A 48 CLASS 30.
   B. HATCH SYSTEMS SHALL BE DESIGNED TO WITHSTAND AASHTO H-20 LOADINGS. HATCH SYSTEMS NOT SUBJECT TO DIRECT TRAFFIC SHALL BE MANUFACTURED OF GRADE 5086 ALUMINUM. HATCH SYSTEMS SUBJECT TO DIRECT TRAFFIC LOADS SHALL BE MANUFACTURED OF STEEL CONFORMING TO ASTM A36-93A, SUPPLIED WITH A HOT-DIP GALVANIZED FINISH CONFORMING TO ASTM A 123 AND ACCESS DOORS BOLTED TO THE FRAME.

2.2 PERFORMANCE

A. REMOVAL EFFICIENCIES

1. THE SWTD SHALL BE CAPABLE OF ACHIEVING AN 80 PERCENT AVERAGE ANNUAL REDUCTION IN THE TOTAL SUSPENDED SOLID LOAD.
2. THE SWTD SHALL BE CAPABLE OF CAPTURING AND RETAINING 100 PERCENT OF POLLUTANTS GREATER THAN OR EQUAL TO [4.7 MILLIMETERS (MM) OR 2.4 MILLIMETERS (MM)] REGARDLESS OF THE POLLUTANT'S SPECIFIC GRAVITY (I.E.: FLOATABLE AND NEUTRALLY BUOYANT MATERIALS) FOR FLOWS UP TO THE DEVICE'S RATED-TREATMENT CAPACITY. THE SWTD SHALL BE DESIGNED TO RETAIN ALL PREVIOUSLY CAPTURED POLLUTANTS ADDRESSED BY THIS SUBSECTION UNDER ALL FLOW CONDITIONS.
3. THE SWTD SHALL BE CAPABLE OF CAPTURING AND RETAINING TOTAL PETROLEUM HYDROCARBONS. THE SWTD SHALL BE CAPABLE OF ACHIEVING A REMOVAL EFFICIENCY OF 92 AND 78 PERCENT WHEN THE DEVICE IS OPERATING AT 25 AND 50 PERCENT OF ITS RATED-TREATMENT CAPACITY. THESE REMOVAL EFFICIENCIES SHALL BE BASED ON INDEPENDENT THIRD-PARTY RESEARCH FOR INFLUENT OIL CONCENTRATIONS REPRESENTATIVE OF STORM WATER RUNOFF (20 ± 5 MG/L). THE SWTD SHALL BE GREATER THAN 99 PERCENT EFFECTIVE IN CONTROLLING DRY-WEATHER ACCIDENTAL OIL SPILLS. THE SWTD SHALL BE CAPABLE OF UTILIZING SORBENT MEDIA TO ENHANCE REMOVAL AND RETENTION OF PETROLEUM BASED POLLUTANTS.

B. HYDRAULIC CAPACITY

1. THE SWTD SHALL PROVIDE A RATED-TREATMENT CAPACITY, WHICH IS CONSISTENT WITH GOVERNING WATER TREATMENT REGULATIONS, AT ITS RATED-TREATMENT CAPACITY, THE DEVICE SHALL BE CAPABLE OF ACHIEVING GREATER THAN 65 PERCENT REMOVAL OF PARTICLES TYPICALLY FOUND IN ROADSIDE SEDIMENTS. THIS REMOVAL EFFICIENCY SHALL BE SUPPORTED BY INDEPENDENT THIRD-PARTY RESEARCH UTILIZING SAMPLES CONSISTENT WITH THE NURP GRADATION OR FINER.
2. THE SWTD SHALL MAINTAIN THE PEAK CONVEYANCE CAPACITY OF THE DRAINAGE NETWORK AS DEFINED BY THE ENGINEER.

C. STORAGE CAPACITY

1. 1. THE SWTD SHALL BE DESIGNED WITH A SUMP CHAMBER FOR THE STORAGE OF CAPTURED SEDIMENTS AND OTHER NEGATIVELY BUOYANT POLLUTANTS IN BETWEEN MAINTENANCE CYCLES. THE MINIMUM STORAGE CAPACITY PROVIDED BY THE SUMP CHAMBER SHALL BE IN ACCORDANCE WITH THE VOLUME LISTED IN TABLE 1. THE BOUNDARIES OF THE SUMP CHAMBER SHALL BE LIMITED TO THAT WHICH DO NOT DEGRADE THE SWTD'S TREATMENT EFFICIENCY AS CAPTURED POLLUTANTS ACCUMULATE. THE SUMP CHAMBER SHALL BE SEPARATE FROM THE TREATMENT PROCESSING PORTION(S) OF THE SWTD TO MINIMIZE THE PROBABILITY OF FINE PARTICLE RE-SUSPENSION. IN ORDER TO NOT RESTRICT THE OWNER'S ABILITY TO MAINTAIN THE SWTD, THE MINIMUM DIMENSION PROVIDING ACCESS FROM THE GROUND SURFACE TO THE SUMP CHAMBER SHALL BE 20 INCHES IN DIAMETER.
2. THE SWTD SHALL BE DESIGNED TO CAPTURE AND RETAIN TOTAL PETROLEUM HYDROCARBONS GENERATED BY WET-WEATHER FLOW AND DRY-WEATHER GROSS SPILLS. THE MINIMUM STORAGE CAPACITY PROVIDED BY THE SWTD SHALL BE IN ACCORDANCE WITH THE VOLUME LISTED IN TABLE 1 BELOW.

CDS Model	Treatment Capacity (cfs)/(L/s)	Minimum Sump Storage Capacity (yd^3)/(m^3)	Minimum Oil Storage Capacity (gal)/(L)
CDS3040	3.0 (85.0)	2.1 (1.6)	205 (776)
CDS3030-D	3.0 (85.0)	2.1 (1.6)	205 (776)
CDS3030-DV	3.0 (85.0)	2.1 (1.6)	205 (776)

D. ALTERNATE TREATMENT TECHNOLOGIES AND SIZING CRITERIA

THE SIZING CRITERIA FOR TREATMENT SYSTEMS MUST CONFORM TO THE RECOMMENDED LOADING RATE AND 3RD PARTY TESTING DATA REQUIREMENTS AS MENTIONED BELOW:

1. CDS SCREENING SYSTEMS - DESIGNED FOR FULL TREATMENT OF THE RUNOFF RATE AT A LOADING RATE NOT TO EXCEED THE CRITICAL FLOW IN THE INLET, IN ORDER TO ACHIEVE 80% TSS REMOVAL EFFICIENCY. (80% TSS REMOVAL BASED ON A AVERAGE PARTICLES SIZE OF 63 MICRON)
2. VORTEX SEPARATION SYSTEMS - DESIGNED FOR FULL TREATMENT OF THE RUNOFF RATE AT A LOADING RATE NOT TO EXCEEDING 24 GPM/FT2, IN ORDER TO ACHIEVE 80% TSS REMOVAL EFFICIENCY. THE HYDRAULIC CAPACITY SHOULD NOT EXCEED A LOADING RATE OF 100 GPM/FT2 TO PREVENT SCOURING OF PREVIOUSLY CAPTURED PARTICLES. 80% TSS REMOVAL BASED ON A AVERAGE PARTICLES SIZE OF 63 MICRON)
3. GRAVITY SYSTEMS - DESIGNED FOR FULL TREATMENT OF THE RUNOFF RATE AT A LOADING RATE NOT TO EXCEEDING 10 GPM/FT2, IN ORDER TO ACHIEVE 80% TSS REMOVAL EFFICIENCY. THE GRAVITY UNITS WILL NOT EXCEED LUMINAR FLOW CONDITION PARAMETERS IN THE TREATMENT UNIT BUT WILL PROVIDE A BYPASS SYSTEM TO PREVENT TURBULENCE FROM ACCRUING IN THE SYSTEM. (SEE "STOKES LAW" FOR GRAVITY SETTLING REQUIREMENTS OF PARTICLES. 80% TSS REMOVAL BASED ON A AVERAGE PARTICLES SIZE OF 63 MICRON)

ADDITIONALLY, THE PERFORMANCE OF THE UNIT MUST BE EVALUATED BY A THIRD PARTY AND VERIFIED IN A PROGRAM THAT ALLOWS A MORE-OR-LESS DIRECT COMPARISON TO OTHER TECHNOLOGIES. PERFORMANCE SHOULD BE THIRD PARTY VERIFIED, AND REMOVAL EFFICIENCIES ACROSS THE SPECTRUM OF PARTICLE SIZES REPORTED, AT A RANGE OF HYDRAULIC LOADING RATES VARYING OVER A RANGE OF AT LEAST 25 TO 125% OF THE MANUFACTURER'S ADVERTISED "WATER TREATMENT" LOADING RATE.

2.3 MANUFACTURER

THE MANUFACTURER OF THE SWTD SHALL BE ONE THAT IS REGULARLY ENGAGED IN THE ENGINEERING DESIGN AND PRODUCTION OF SYSTEMS DEPLOYED FOR THE TREATMENT OF STORM WATER RUNOFF FOR AT LEAST FIVE (5) YEARS AND WHICH HAVE A HISTORY OF SUCCESSFUL PRODUCTION, ACCEPTABLE TO THE ENGINEER. IN ACCORDANCE WITH THE DRAWINGS, THE SWTD(S) SHALL BE A CDS® DEVICE MANUFACTURED BY:

CONTECH ENGINEERED SOLUTIONS
9025 CENTRE POINTE DR., SUITE 400
WEST CHESTER, OH 45069
(800) 338-1122

PART 3 - EXECUTION

3.1 HANDLING AND STORAGE

1. 1. THE CONTRACTOR SHALL EXERCISE CARE IN THE STORAGE AND HANDLING OF THE SWTD COMPONENTS PRIOR TO AND DURING INSTALLATION. ANY REPAIR OR REPLACEMENT COSTS ASSOCIATED WITH EVENTS OCCURRING AFTER DELIVERY IS ACCEPTED AND UNLOADING HAS COMMENCED SHALL BE BORN BY THE CONTRACTOR.

3.2 INSTALLATION

1. THE SWTD SHALL BE INSTALLED IN ACCORDANCE WITH THE MANUFACTURER'S RECOMMENDATIONS AND RELATED SECTIONS OF THE CONTRACT DOCUMENTS. THE MANUFACTURER SHALL PROVIDE THE CONTRACTOR INSTALLATION INSTRUCTIONS AND OFFER ON- SITE GUIDANCE DURING THE IMPORTANT STAGES OF THE INSTALLATION AS IDENTIFIED BY THE MANUFACTURER AT NO ADDITIONAL EXPENSE. A MINIMUM OF 72 HOURS NOTICE SHALL BE PROVIDED TO THE MANUFACTURER PRIOR TO THEIR PERFORMANCE OF THE SERVICES INCLUDED UNDER THIS SUBSECTION.
2. THE CONTRACTOR SHALL FILL ALL VOIDS ASSOCIATED WITH LIFTING PROVISIONS PROVIDED BY THE MANUFACTURER. THESE VOIDS SHALL BE FILLED WITH NON-SHRINKING GROUT PROVIDING A FINISHED SURFACE CONSISTENT WITH ADJACENT SURFACES. THE CONTRACTOR SHALL TRIM ALL PROTRUDING LIFTING PROVISIONS FLUSH WITH THE ADJACENT CONCRETE SURFACE IN A MANNER WHICH LEAVES NO SHARP POINTS OR EDGES.

1 CONTECH CDS3030 DETAIL & SPECIFICATIONS

NOT TO SCALE

ENGINEER APPROVED SHOP DRAWINGS MUST BE SUBMITTED TO MSD PRIOR TO THE CONSTRUCTION OF THIS STRUCTURE. MSD CONTACT: BRIAN DUNN (314) 335-2072

MB Engineering, Inc.
606 Ryan Drive
Energy, IL 62933
(314) 368-3040

STATE OF MISSOURI
MICHAEL A. BUESCHER
NUMBER E-2001018714
PROFESSIONAL ENGINEER
7/25/23

Michael A. Buescher, P.E. Civil Engineering
Missouri P.E. E-2001018714

MB Engineering, Inc. Missouri Authority No. E-2015041404

The Professional Engineer's seal affixed to this sheet indicates that the named Engineer has prepared or directed the preparation of the material shown only on this sheet. Other drawings and documents not exhibiting this seal shall not be considered prepared by or the responsibility of the undersigned.

PROJECT REVISION:

NO:	DATE:	DESCRIPTION:
1	11-21-22	FOR REVIEW
2	05-16-23	CITY COMMENTS
3	07-11-23	CITY COMMENTS
4	07-25-23	CITY COMMENTS

3601 SW Hollywood Dr.
Lee's Summit, MO 64082

DATE: 11-21-22
DRAFTED BY: KB
APPRVD. BY: MB

SHEET TITLE:
TYPICAL DETAILS

SHEET NUMBER:
C3-02

PROJECT NO: 22-752

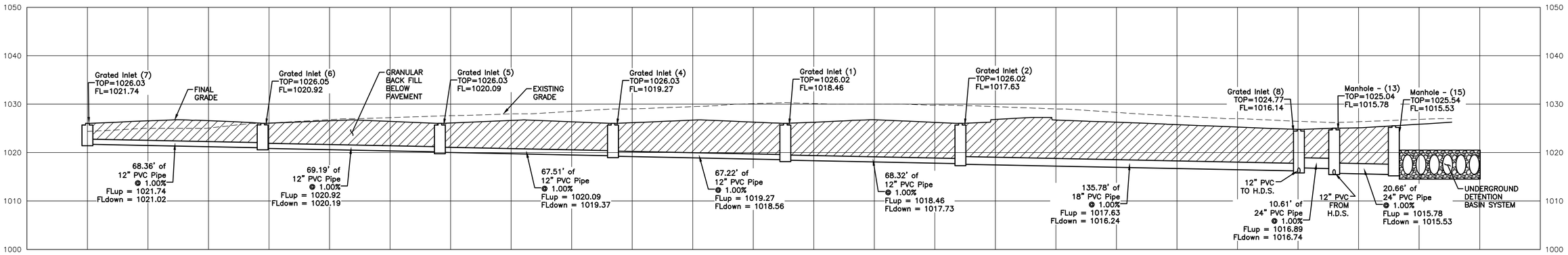

A STORM SEWER PROFILE
SCALE: 1" = 20' HORZ – 1" = 10' VERT

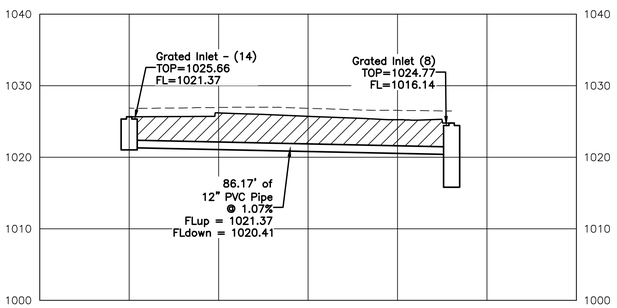

B STORM SEWER PROFILE
SCALE: 1" = 20' HORZ – 1" = 10' VERT

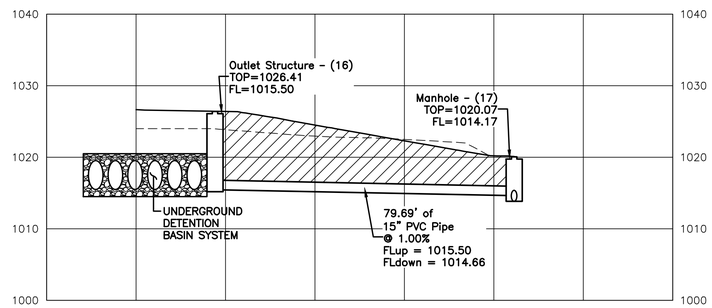

C STORM SEWER PROFILE
SCALE: 1" = 20' HORZ – 1" = 10' VERT

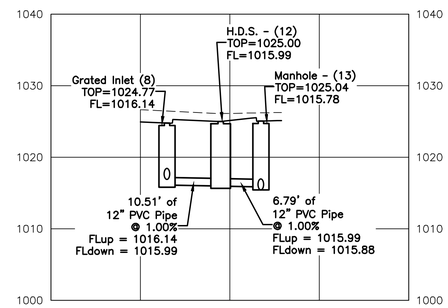

D STORM SEWER PROFILE
SCALE: 1" = 20' HORZ – 1" = 10' VERT

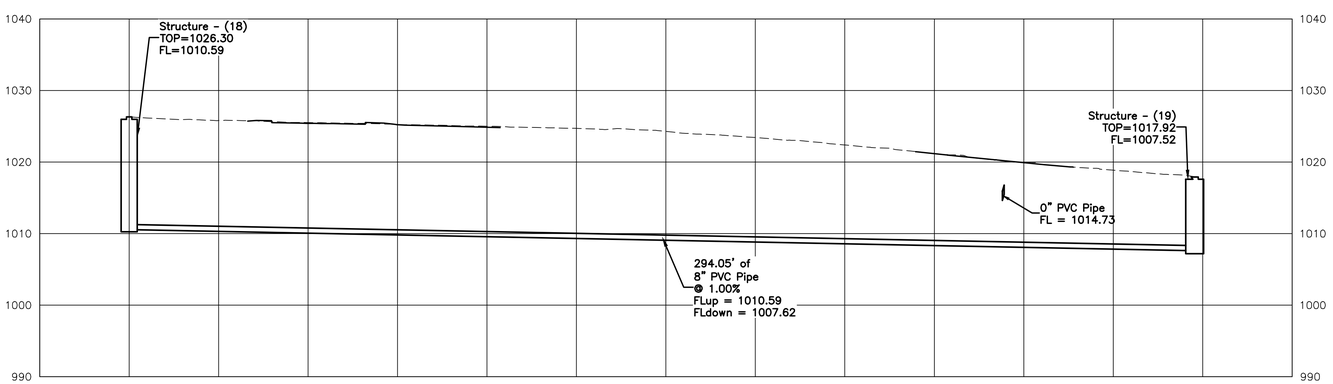

E SANITARY SEWER PROFILE
SCALE: 1" = 20' HORZ – 1" = 10' VERT

MB Engineering, Inc.
606 Ryan Drive
Energy, IL 62933
(314) 368-3040

STATE OF MISSOURI
MICHAEL A. BUESCHER
NUMBER E-2001018714
REGISTERED PROFESSIONAL ENGINEER
7/25/23

Michael A. Buescher, P.E. Civil Engineering
Missouri P.E. E-2001018714

MB Engineering, Inc. Missouri Authority No. E-2015041404

The Professional Engineer's seal affixed to this sheet indicates that the named Engineer has prepared or directed the preparation of the material shown only on this sheet. Other drawings and documents not exhibiting this seal shall not be considered prepared by or the responsibility of the undersigned.

PROJECT REVISION:

NO:	DATE:	DESCRIPTION:
1	11-21-22	FOR REVIEW
2	05-16-23	CITY COMMENTS
3	07-11-23	CITY COMMENTS
4	07-25-23	CITY COMMENTS

3601 SW Hollywood Dr.

Lee's Summit, MO 64082

DATE: 11-21-22
DRAFTED BY: KB
APPRVD. BY: MB

SHEET TITLE:
SEWER PROFILES

SHEET NUMBER:
C3-03

PROJECT NO: 22-752

PROPOSED LAYOUT HYDROCHAIN S-29B CHAMBER		
		SYSTEM
BASE STONE	IN	6
TOP STONE	IN	18
SECTION HEIGHT	FT	5.11
AREA	SF	5,874
PERIMETER	FT	404
CHAMBERS	EA	355
END CAPS	EA	16
EXCAVATION REQUIRED[1]	CY	1,111
NON-WOVEN FABRIC REQUIRED[2]	SY	1,535
MHR AND SCOUR PROTECTION LENGTH (WOVEN FABRIC)	LF	82
DUAL WALL HDPE UNDERDRAIN PIPE (IF APPLICABLE)	LF	0
STONE REQUIRED (30% VOID SPACE)	CY	745
TOTAL STORAGE	CF	15,922

1. EXCAVATION CALCULATION IS FOR DISPLACED EARTH. IT IS SYSTEM SECTION HEIGHT MULTIPLIED BY SYSTEM AREA. IT DOES NOT INCLUDE EXCAVATION NEEDED FROM TOP OF STONE TO BASE OF PAVEMENT.
2. NON-WOVEN FABRIC IS REQUIRED ON TOP, SIDES AND BOTTOM OF SYSTEM.

NOTES:
1. INSTALL CHAMBERS AND END CAPS IN ACCORDANCE WITH THE SITE SPECIFIC PLANS, HYDROCHAIN INSTALLATION MANUAL AND SUPPLEMENTAL DOCUMENTS. REFERENCE THE QR CODE BELOW FOR PRODUCT DOCUMENTS.
2. QUANTITIES GIVEN ARE NEATLINE AND DO NOT INCLUDE WASTE OR EXCESS NEEDED FOR OVERLAP.
3. THIS PROPOSED DESIGN IS BASED ON THE ASSUMPTION OF A 4.0 KSF SOIL BEARING PRESSURE. ACTUAL SITE SPECIFIC SOIL BEARING MUST BE PROVIDED TO XERXES PRIOR TO THE START OF ANY PROJECT. ACTUAL SITE SPECIFIC SOIL BEARINGS MAY IMPACT XERXES' FINAL DESIGN AND MAY AFFECT THE FINAL COST OF THE OVERALL PROJECT. THE DESIGN ENGINEER IS SOLELY RESPONSIBLE FOR ASSESSING THE BEARING RESISTANCE (ALLOWABLE BEARING CAPACITY) OF THE SUBGRADE SOILS AND DETERMINING THE DEPTH OF FOUNDATION STONE. SUBGRADE BEARING RESISTANCE SHOULD BE ASSESSED WITH CONSIDERATION FOR THE RANGE OF SOIL MOISTURE CONDITIONS EXPECTED UNDER A STORMWATER SYSTEM.

PROPOSED ELEVATIONS	
MAXIMUM ALLOWABLE GRADE (TOP OF PAVEMENT/UNPAVED)	1068.53
MINIMUM ALLOWABLE GRADE (UNPAVED WITH TRAFFIC)	1020.53
MINIMUM ALLOWABLE GRADE (UNPAVED NO TRAFFIC)	1020.03
MINIMUM ALLOWABLE GRADE (TOP OF RIGID CONCRETE PAVEMENT)	1020.03
MINIMUM ALLOWABLE GRADE (BASE OF FLEXIBLE PAVEMENT)	1020.03
TOP OF STONE	1020.03
TOP OF CHAMBER	1018.53
BOTTOM OF CHAMBER	1015.42
BOTTOM OF STONE	1014.92

PLAN DISCLAIMER

THIS DRAWING IS CONCEPTUAL AND DOES NOT GUARANTEE THE SIZING, LAYOUT, SUITABILITY, MATERIAL QUANTITIES, OR DETAILS FOR THE SHOWN SYSTEM. IT IS THE RESPONSIBILITY OF THE SITE ENGINEER AND OWNER'S REPRESENTATIVE TO ASSURE THAT THE STORMWATER SYSTEM DESIGN IS IN COMPLIANCE WITH ALL APPLICABLE LAWS, REGULATIONS AND SITE REQUIREMENTS. HYDROCHAIN PRODUCTS MUST BE DESIGNED AND INSTALLED IN ACCORDANCE WITH XERXES' MINIMUM REQUIREMENTS. THE DESIGN MUST CONSIDER SOIL STABILITY, NEARBY SLOPES AND STRUCTURES, SURFACE LOADS, GROUNDWATER INFLUENCES AND OTHER SITE CONDITIONS THAT MAY IMPACT SHORT-TERM AND LONG-TERM SYSTEM INTEGRITY. XERXES DOES NOT APPROVE PLANS, SIZING, OR SYSTEM DESIGNS. THE SITE ENGINEER AND OWNER'S REPRESENTATIVES ARE RESPONSIBLE FOR ALL DESIGN DECISIONS.

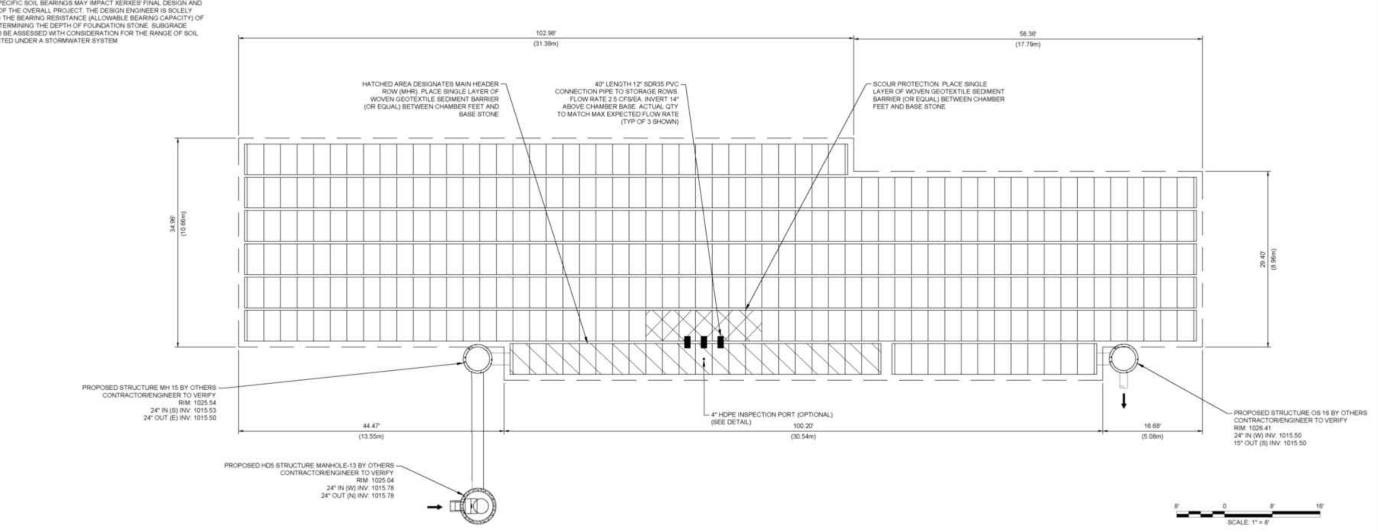

WATERSALES@SHAWCOR.COM

XERXES®

REVISION		
DATE	REV No	DESCRIPTION
05/11/2023	0	INITIAL SUBMITTAL
05/17/2023	1	ADDED CHAMBERS
06/16/2023	2	STONE VOID DECREASED TO 30%
-	-	-
-	-	-
-	-	-
-	-	-

MANAGER, INSIDE SALES - WATER PRODUCTS	NANETTE MUNTIN 810-599-0957 NANETTE.MUNTIN@SHAWCOR.COM
PROJECT NO:	SW230131
DRAWN BY: IDM	DATE: 06/16/2023

LEE SUMMIT CAR WASH
LEE'S SUMMIT, MO

HYDROCHAIN™ CHAMBER LAYOUT
S-29B SYSTEM
WITHOUT LINER

NOTES:
1. INSTALL THE MAIN HEADER ROW, CHAMBERS, AND END CAPS IN ACCORDANCE WITH THE SITE SPECIFIC PLANS, HYDROCHAIN INSTALLATION MANUAL AND SUPPLEMENTAL DOCUMENTS. REFERENCE THE QR CODE BELOW FOR PRODUCT DOCUMENTS.
2. CONDUCT INSPECTION AND MAINTENANCE IN ACCORDANCE WITH HYDROCHAIN CHAMBER MAIN HEADER ROW OPERATION AND MAINTENANCE MANUAL.

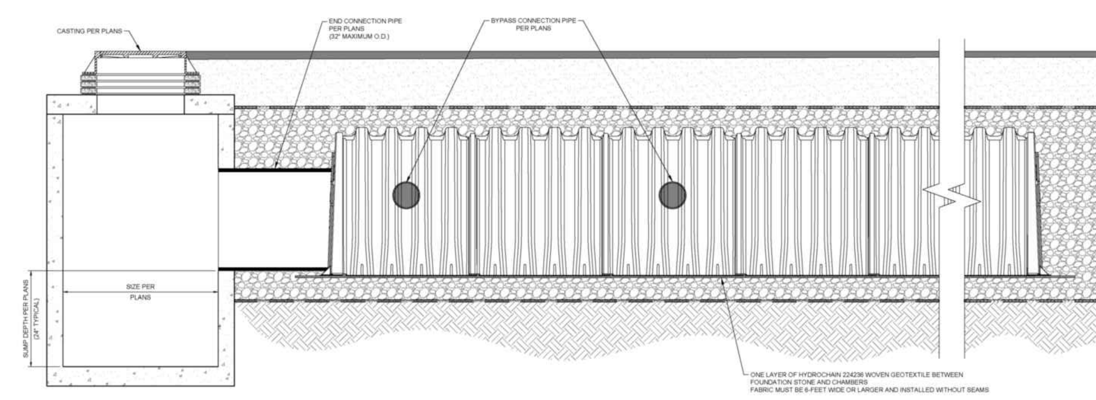

WATERSALES@SHAWCOR.COM

XERXES®

HYDROCHAIN™
S-29B CHAMBER
MAIN HEADER ROW (MHR) DETAIL

DATE	03/22/2023	SHEET 1 OF 1

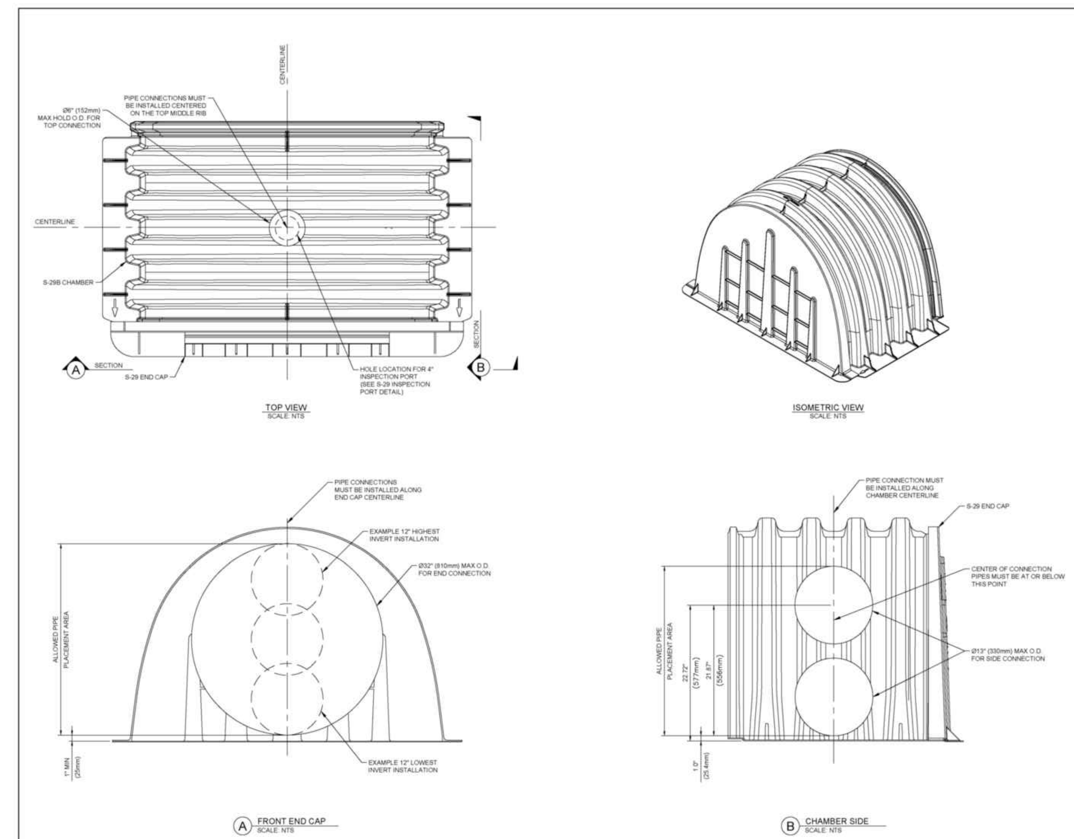

CONNECTION PIPE COMPATIBILITY TABLE					
PIPE SIZE	PIPE MATERIAL[1]	HOLE CUT[2] MIN-MAX	SIDE CONNECTION	TOP CONNECTION	END CAP
4"	PVC	4.5"-5.5" (114mm-140mm)	X	X	X
	HDPE/PP	4.8"-5.8" (122mm-147mm)	X	X	X
6"	PVC	6.625"-7.625" (168mm-194mm)	X	X	X
	HDPE/PP	6.9"-7.9" (175mm-201mm)	X	X	X
8"	PVC	8.625"-9.625" (219mm-244mm)	X		X
	HDPE/PP	9.1"-10.1" (231mm-257mm)	X		X
12"	PVC	12.75"-13.75" (324mm-349mm)	X		X
	HDPE/PP	14.5"-15.5" (368mm-394mm)			X
	RCP	17.5"-18.5" (445mm-470mm)			X
15"	PVC	16"-17" (406mm-431mm)			X
	HDPE/PP	22"-23" (559mm-584mm)			X
	RCP	23"-24" (584mm-610mm)			X
18"	PVC	18"-19" (457mm-483mm)			X
	HDPE/PP	22"-23" (559mm-584mm)			X
	RCP	23"-24" (584mm-610mm)			X
24"	PVC	24"-25" (610mm-635mm)			X
	HDPE/PP	28"-29" (711mm-737mm)			X
	RCP	30"-31" (762mm-787mm)			X

1. PVC HOLE CUT SIZES BASED ON SCH-40, SCH-80, SDR-35, AND SDR-26 PIPES. HDPE/PP HOLE CUT SIZES BASED ON INDUSTRY STANDARD PIPES CONFORMING TO ASTM F2881/F2306/F2648. RCP HOLE CUT SIZES BASED ON INDUSTRY STANDARD PIPES CONFORMING TO ASTM C76/C655. CONTACT SHAWCOR AT WATERSALES@SHAWCOR.COM FOR ADDITIONAL INFORMATION.
2. CUT THE HOLE TO MINIMIZE GAPS BETWEEN THE CONNECTING PIPE O.D. AND CHAMBER HOLE I.D.

SCAN FOR STEP-BY-STEP VIDEO INSTRUCTIONS AND DEMONSTRATION OF CUTTING HOLES FOR PIPES
https://www.youtube.com/watch?v=h3VjsUkOklY

NOTES:
1. CUT CHAMBERS AND END CAPS IN ACCORDANCE WITH THE HYDROCHAIN CHAMBER SUPPLEMENTAL INSTRUCTIONS AND INSTALLATION MANUAL. REFERENCE THE QR CODE BELOW FOR PRODUCT DOCUMENTS.

RECOMMENDED EQUIPMENT:
1. PERSONAL PROTECTION EQUIPMENT (PPE): GLOVES, SAFETY GLASSES, FACE SHIELD, LONG-SLEEVE SHIRT, RESPIRATOR MASK, HEARING PROTECTION, SAFETY-TOED SHOES, HARDHAT, HIGH-VISIBILITY CLOTHING.
2. HAND TOOLS: MARKER, RECIPROCATING SAW WITH BIMETAL TAPERED BLADES, DRILL WITH 0.5" BITS, ANGLE GRINDER, TAPE MEASURE.
3. EXPENDABLES: SPRAY FOAM GAP SEALER TO FILL GAPS BETWEEN PIPE O.D. AND HOLE.

WATERSALES@SHAWCOR.COM

XERXES®

HYDROCHAIN™
S-29B CHAMBER AND S-29 END CAP
HOLE CUTTING DETAIL

DATE	03/22/2023	SHEET 1 OF 1

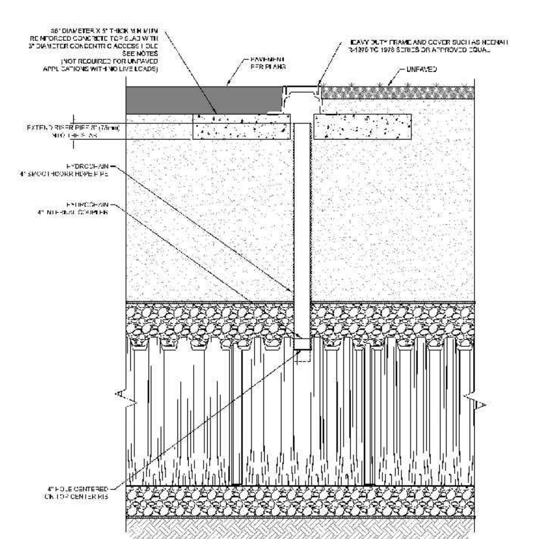

PARTS LIST		
ITEM	QTY	PROVIDER
HEAVY DUTY FRAME AND COVER SUCH AS NEENAH R-1970 TO 1978 SERIES OR APPROVED EQUAL	-	CONTRACTOR/OTHERS
36" REINFORCED CONCRETE TOP SLAB	-	CONTRACTOR/OTHERS
HYDROCHAIN 4" SMOOTHCORE HDPE PIPE	PER PLANS	MANUFACTURER
HYDROCHAIN 4" INTERNAL COUPLER	-	MANUFACTURER

NOTES:
1. INSTALL INSPECTION PORTS IN ACCORDANCE WITH THE SITE-SPECIFIC PLANS, HYDROCHAIN INSTALLATION MANUAL AND SUPPLEMENTAL DOCUMENTS. REFERENCE THE QR CODE BELOW FOR PRODUCT DOCUMENTS.
2. THE INSPECTION PORT PIPE MUST NOT BE CONNECTED TO THE TOP SLAB. THE RISER PIPE MUST NOT BE SUBJECT TO SURFACE LOADS.
3. SEE HYDROCHAIN CHAMBER CROSS SECTION STANDARD DETAIL FOR CHAMBER AND MINIMUM BACK FILL DIMENSIONS.

OPERATION AND MAINTENANCE:
1. REMOVE CASTING LID.
2. USE A LIGHT AND STADIA ROD TO MEASURE THE SEDIMENT DEPTH IN THE BOTTOM OF THE CHAMBER.
3. OPTIONALLY A BORESCOPE CAMERA MAY BE USED TO INSPECT THE INSIDE OF THE CHAMBERS.
4. IF SEDIMENT DEPTH IS ABOVE ACCEPTABLE LEVELS THEN PERFORM MAINTENANCE IN ACCORDANCE WITH LOCAL REQUIREMENTS AND HYDROCHAIN CHAMBER OPERATION AND MAINTENANCE MANUAL.

WATERSALES@SHAWCOR.COM

XERXES®

HYDROCHAIN™
S-29B CHAMBER
4-INCH INSPECTION PORT

DATE	04/03/2023	SHEET 1 OF 1

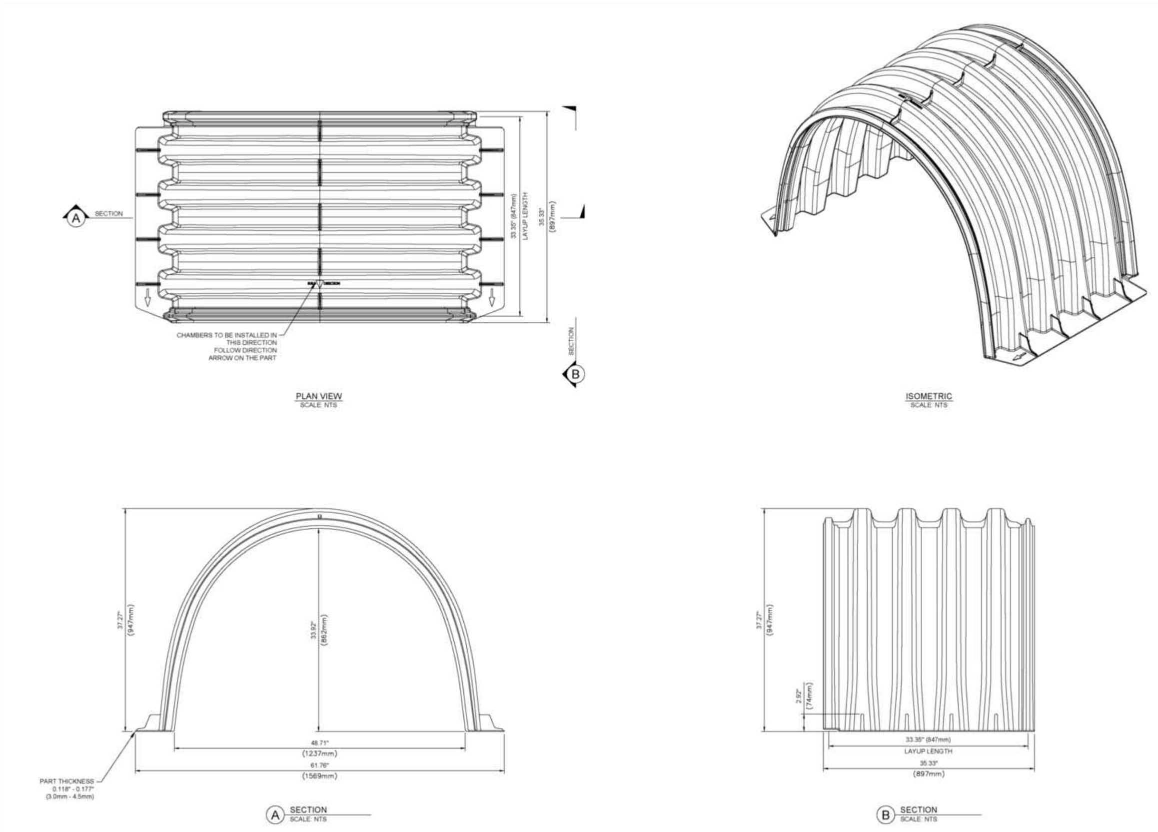

S-29B CHAMBER PROPERTIES	
NOMINAL DIMENSIONS (LAYUP LENGTH × WIDTH × HEIGHT)	33.35" × 61.76" × 37.27" (847mm × 1569mm × 947mm)
BARE CHAMBER STORAGE	27.80 CUBIC FEET (0.787 CUBIC METERS)
*MIN INSTALLED STORAGE	42.07 CUBIC FEET (1.191 CUBIC METERS)
CHAMBER WEIGHT	34 LBS (15.42 kg)
STORAGE PER LINEAR UNIT WITHOUT STONE	10.0 FT³/FT (0.929 M³/M)
STORAGE PER LINEAR UNIT WITH STONE	15.1 FT³/FT (1.406 M³/M)
*ASSUMING A MIN OF 6" (152mm) STONE ABOVE AND BELOW AND 5" (127mm) BETWEEN ROWS WITH 40% STONE POROSITY (DOES NOT INCLUDE 12" (305mm) PERIMETER STONE VOLUME)	

NOTE: S-29B CHAMBERS ARE RATED FOR HS-25 LOADING WITH 18-INCHES (457mm) OF COVER WITHOUT PAVEMENT.

HYDROCHAIN S-29B PRODUCT SPECIFICATIONS

1.0 GENERAL

1.1 HYDROCHAIN CHAMBERS ARE DESIGNED TO CONTROL STORMWATER RUNOFF. AS A SUBSURFACE RETENTION OR DETENTION SYSTEM, HYDROCHAIN CHAMBERS RETAIN AND ALLOW EFFECTIVE INFILTRATION OF WATER INTO THE SOIL. AS A SUBSURFACE DETENTION SYSTEM, HYDROCHAIN CHAMBERS DETAIN AND ALLOW FOR THE CONTROLLED FLOW OF WATER TO AN OUTFALL.

2.0 CHAMBER PARAMETERS

2.1 THE CHAMBER SHALL BE INJECTION COMPRESSION MOLDED STRUCTURAL GRADE PP COMPOSITE THAT IS INHERENTLY RESISTANT TO ENVIRONMENTAL STRESS CRACKING (ESCR), AND CREEP. THE CHAMBER SHALL MAINTAIN PROPER STIFFNESS THROUGH TEMPERATURE RANGES OF 0 DEGREES FAHRENHEIT TO 170 DEGREES FAHRENHEIT (-12 DEGREES CELSIUS TO 76.7 DEGREES CELSIUS).

2.2 THE NOMINAL CHAMBER DIMENSION OF THE HYDROCHAIN S-29B SHALL BE 37.27 INCHES TALL (947 MILLIMETERS), 61.76 INCHES WIDE (1569 MILLIMETERS) AND 35.33 INCHES LONG (847 MILLIMETERS). LAY-UP LENGTH IS 33.35 INCHES (847 MILLIMETERS).

2.3 THE CHAMBER SHALL BE OPEN BOTTOMED.

2.4 THE CHAMBER SHALL INCORPORATE AN OVERLAPPING CORRUGATION JOINT SYSTEM TO ALLOW CHAMBER ROWS TO BE CONSTRUCTED.

2.5 THE NOMINAL STORAGE VOLUME SHALL BE 42.52 CUBIC FEET (1.204 CUBIC METERS) PER CHAMBER WHEN INSTALLED PER HYDROCHAIN'S TYPICAL DETAILS. THIS EQUATES TO 15.3 CUBIC FEET (1.421 CUBIC METERS PER METER) OF STORAGE PER LINEAR FOOT OF BED. THIS DOES NOT INCLUDE PERIMETER STONE.

2.6 THE CHAMBER SHALL HAVE BOTH OF ITS ENDS OPEN TO ALLOW FOR UNIMPEDED HYDRAULIC FLOW AND VISUAL INSPECTIONS DOWN A ROW'S LENGTH.

2.7 THE CHAMBER SHALL HAVE SIX CORRUGATIONS TO ACHIEVE STRENGTHS DEFINED ABOVE.

2.8 HYDROCHAIN S-29B CHAMBERS MEET OR EXCEED THE REQUIREMENTS OF ASTM F2787 AND ASTM F2418. THE DESIGN LIVE LOAD IS BASED ON AASHTO HL93 DESIGN TRUCK WITH LOAD FACTORS.

2.9 THE CHAMBER SHALL BE MANUFACTURED BY AN ISO 9001:2008 CERTIFIED FACILITY.

3.0 INSTALLATION

3.1 INSTALLATION SHALL BE IN ACCORDANCE WITH THE LATEST HYDROCHAIN CHAMBER INSTALLATION MANUAL.

WATERSALES@SHAWCOR.COM

XERXES®

HYDROCHAIN™
S-29B CHAMBER
TECHNICAL SPECIFICATIONS

DATE	03/22/2023	SHEET 1 OF 1

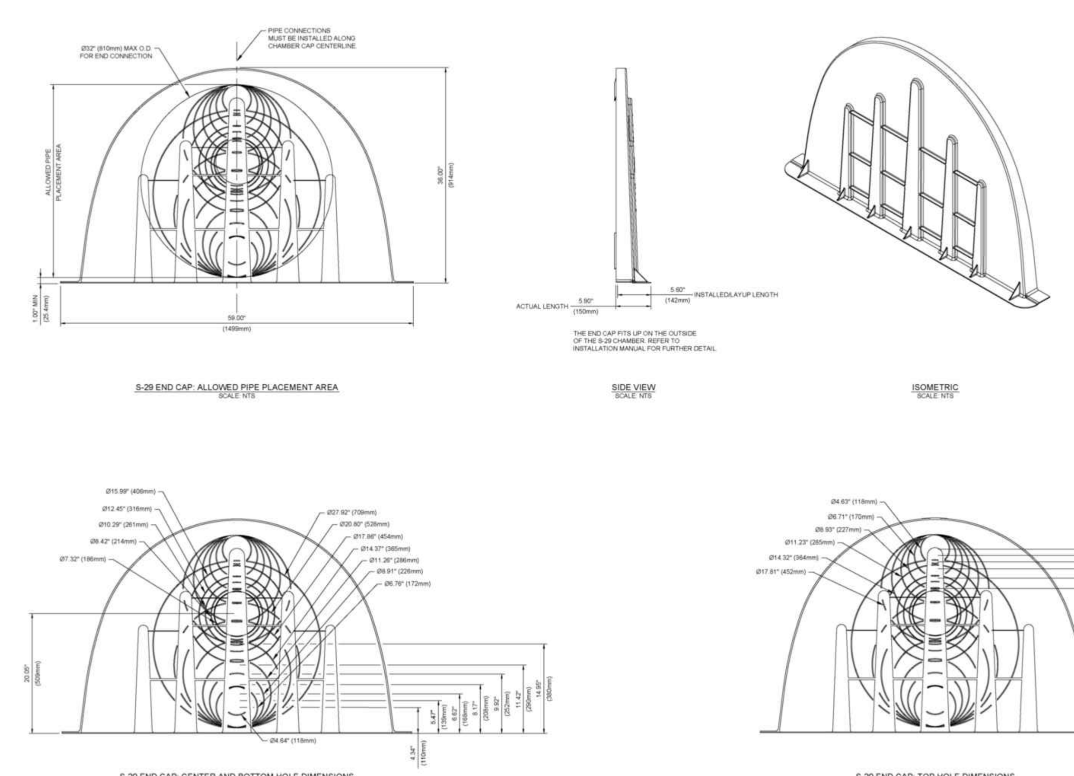

S-29 END CAP PROPERTIES	
NOMINAL DIMENSIONS (LAYUP LENGTH × WIDTH × HEIGHT)	5.90" × 59.00" × 36.00" (150mm × 1499mm × 914mm)
BARE END CAP STORAGE	1.031 CUBIC FEET (0.029 CUBIC METERS)
*MIN INSTALLED STORAGE	4.98 CUBIC FEET (0.141 CUBIC METERS)
*ASSUMING A MIN OF 6" (152mm) STONE ABOVE AND BELOW AND 7.5" (191mm) BETWEEN ROWS WITH 40% STONE POROSITY (DOES NOT INCLUDE 12" (305mm) PERIMETER STONE VOLUME)	

HYDROCHAIN S-29 PRODUCT SPECIFICATIONS

1.0 GENERAL

1.1 HYDROCHAIN CHAMBERS ARE DESIGNED TO CONTROL STORMWATER RUNOFF. AS A SUBSURFACE RETENTION OR DETENTION SYSTEM, HYDROCHAIN CHAMBERS RETAIN AND ALLOW EFFECTIVE INFILTRATION OF WATER INTO THE SOIL. AS A SUBSURFACE DETENTION SYSTEM, HYDROCHAIN CHAMBERS DETAIN AND ALLOW FOR THE CONTROLLED FLOW OF WATER TO AN OUTFALL.

2.0 END CAP PARAMETERS

2.1 THE END CAP SHALL BE INJECTION COMPRESSION MOLDED OF 1010 GREEN SOY RESIN THAT IS INHERENTLY RESISTANT TO ENVIRONMENTAL STRESS CRACKING (ESCR), AND CREEP. THE CHAMBER SHALL MAINTAIN PROPER STIFFNESS THROUGH TEMPERATURE RANGES OF -40 DEGREES FAHRENHEIT TO 180 DEGREES FAHRENHEIT (-40 DEGREE CELSIUS TO 82.2 DEGREES CELSIUS).

2.2 THE MATERIAL PROPERTY FOR THE CHAMBER AND END CAP MUST MEET OR EXCEED THE FOLLOWING:
TENSILE STRENGTH - ULTIMATE: 21,755 PSI (150 Mpa)
TENSILE STRENGTH - YIELD: 17,404 PSI (120 Mpa)
TENSILE MODULUS: 1,750 - 2,240 KSI (12,066 Mpa - 15,444 Mpa)
FLEX MODULUS: 1,600 KSI (11,032 Mpa)
FLEX YIELD STRENGTH: 33,100 PSI (228 Mpa)
COMPRESSIVE STRENGTH: 30,457 PSI (210 Mpa)
SHEAR STRENGTH: 11,500 PSI (79 Mpa)

2.3 THE END CAP SHALL BE DESIGNED TO FIT OVER THE LAST CORRUGATION OF A CHAMBER, WHICH ALLOWS: THE CAPPING OF EACH END OF THE CHAMBER ROW.

2.4 THE END CAP SHALL HAVE SIX UPPER GUIDES CAPABLE OF ACCEPTING PIPE O.D. UP TO 17.81 INCHES (452 MILLIMETERS), FIVE MIDDLE SAW GUIDES CAPABLE OF ACCEPTING PIPE O.D. UP TO 15.99 INCHES (406 MILLIMETERS) AND EIGHT LOWER SAW GUIDES CAPABLE OF ACCEPTING PIPE O.D. UP TO 27.92 INCHES (709 MILLIMETERS) TO ALLOW EASY CUTTING FOR VARIOUS DIAMETERS OF PIPE THAT MAY BE USED TO INLET OR OUTLET THE SYSTEM.

2.5 THE END CAP SHALL PROVIDE STRUCTURAL SUPPORT TO ALLOW CUTTING AN ORIFICE OF ANY SIZE AT ANY INVERT ELEVATION.

2.6 THE PRIMARY FACE OF AN END CAP SHALL HAVE FIVE CORRUGATIONS AND BE ANGLED OUTWARD TO RESIST HORIZONTAL LOADS GENERATED NEAR THE EDGES OF BEDS.

2.7 THE END CAP SHALL BE MANUFACTURED BY AN ISO 9001:2008 CERTIFIED FACILITY.

2.8 THE DESIGN SERVICE LIFE OF THE PRODUCT TO BE GREATER THAN 60 YEARS UNDER A SUSTAINED LOAD OF 10,000 PSI (68.95 MPA) WHICH IS EQUAL TO A H-20 LOADING CONDITION.

2.9 THE NOMINAL STORAGE VOLUME OF A HYDROCHAIN S-29 END CAP SHALL BE 4.98 CUBIC FEET (0.141 CUBIC METERS) PER END CAP WHEN INSTALLED PER HYDROCHAIN'S TYPICAL DETAILS. THIS EQUATES TO 1.63 CUBIC FEET (0.052 CUBIC METERS) OF STORAGE PER SQUARE FOOT OF BED.

3.0 INSTALLATION

3.1 INSTALLATION SHALL BE IN ACCORDANCE WITH THE LATEST HYDROCHAIN CHAMBER INSTALLATION MANUAL.

WATERSALES@SHAWCOR.COM

XERXES®

HYDROCHAIN™
S-29 END CAP
TECHNICAL SPECIFICATIONS

DATE	03/24/2022	SHEET 1 OF 1

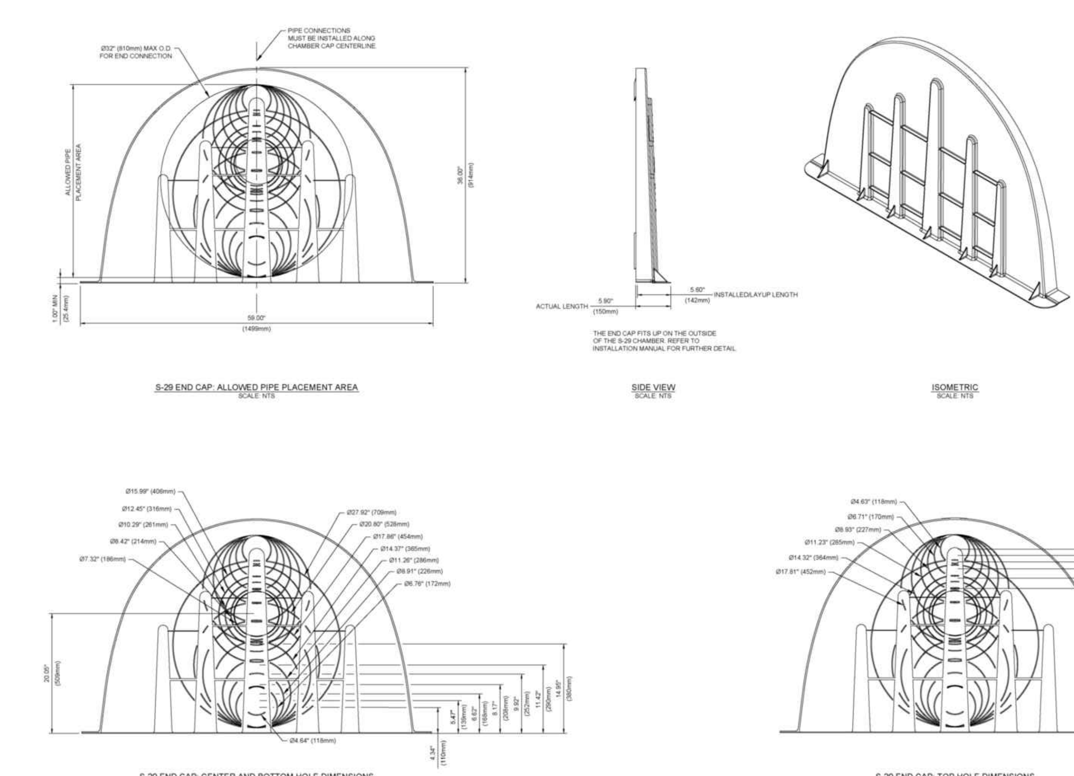

S-29 END CAP PROPERTIES	
NOMINAL DIMENSIONS (LAYUP LENGTH × WIDTH × HEIGHT)	5.90" × 59.00" × 36.00" (150mm × 1499mm × 914mm)
BARE END CAP STORAGE	1.031 CUBIC FEET (0.029 CUBIC METERS)
*MIN INSTALLED STORAGE	4.98 CUBIC FEET (0.141 CUBIC METERS)

HYDROCHAIN S-29 PRODUCT SPECIFICATIONS

WATERSALES@SHAWCOR.COM

XERXES®

HYDROCHAIN™
S-29 END CAP
TECHNICAL SPECIFICATIONS

DATE 03/24/2022 SHEET 1 OF 1

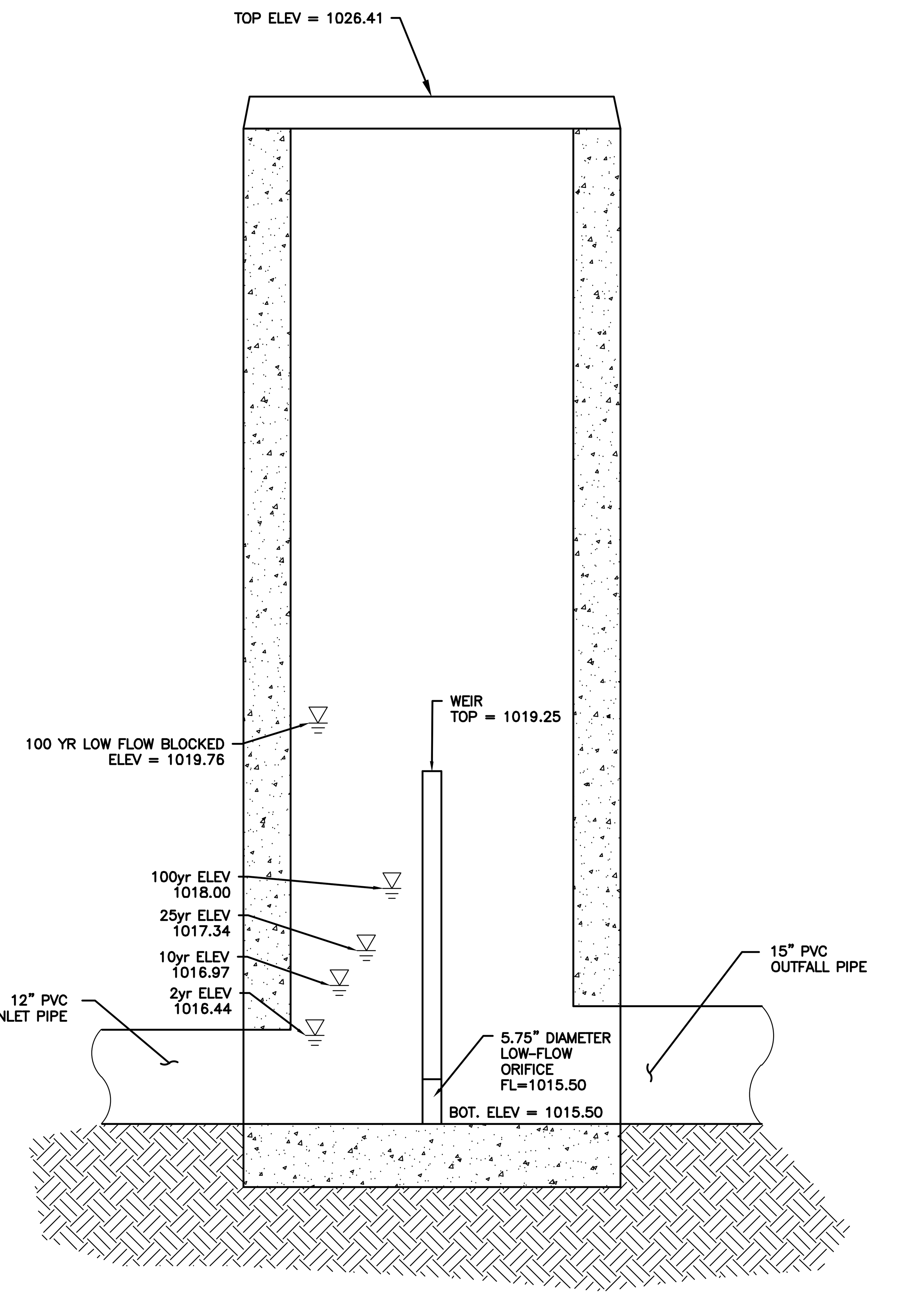

H DFETENTION BASIN OUTFALL STRUCTURE
SCALE: 1" = 1'-0"

MB Engineering, Inc.
606 Ryan Drive
Energy, IL 62933
(314) 368-3040

STATE OF MISSOURI
MICHAEL A. BUESCHER
NUMBER PE-2001018714
REGISTERED PROFESSIONAL ENGINEER
7/25/23

Michael A. Buescher, P.E. Civil Engineering
Missouri P.E. E-2001018714

MB Engineering, Inc. Missouri Authority No. E-2015041404

The Professional Engineer's seal affixed to this sheet indicates that the named Engineer has prepared or directed the preparation of the material shown only on this sheet. Other drawings and documents not exhibiting this seal shall not be considered prepared by or the responsibility of the undersigned.

PROJECT REVISION:

NO:	DATE:	DESCRIPTION:
1	11-21-22	FOR REVIEW
2	05-16-23	CITY COMMENTS
3	07-11-23	CITY COMMENTS
4	07-25-23	CITY COMMENTS

3601 SW Hollywood Dr.
Lee's Summit, MO 64082

DATE: 11-21-22
DRAFTED BY: KB
APPRVD. BY: MB

SHEET TITLE:
UNDERGROUND DETENTION DETAILS

SHEET NUMBER:
C3-04

PROJECT NO: 22-752

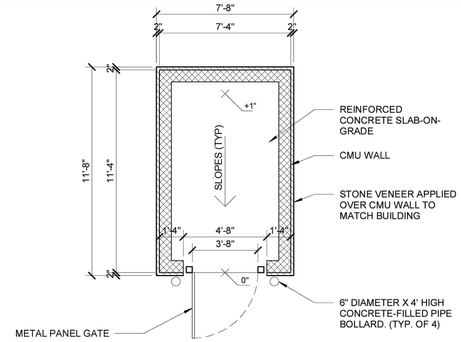

VAC ENCLOSURE PLAN
1/4" = 1'-0"

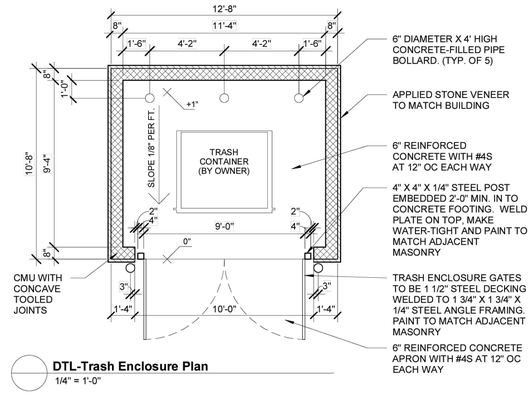

DTL-Trash Enclosure Plan
1/4" = 1'-0"

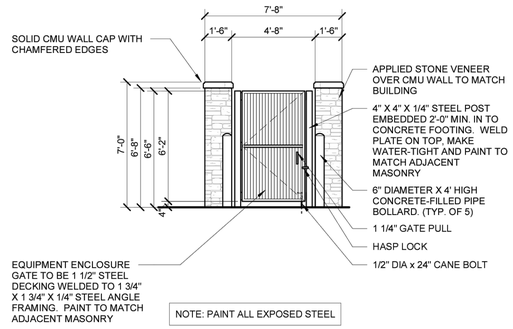

VAC ENCLOSURE FRONT ELEVATION
1/4" = 1'-0"

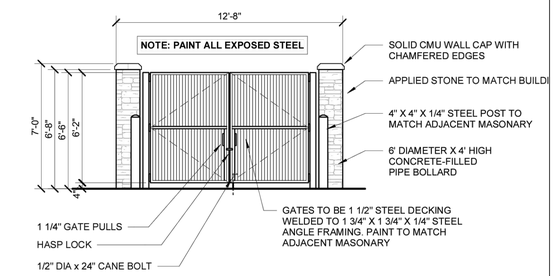

DTL-Trash Enclosure Front Elevation
1/4" = 1'-0"

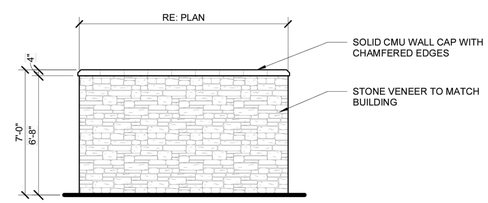

VAC ENCLOSURE SIDE ELEVATION
1/4" = 1'-0"

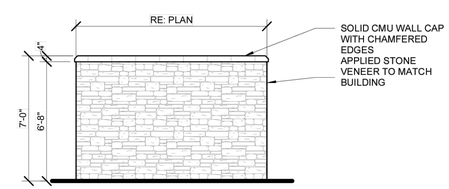

DTL-Trash Enclosure Side Elevation
1/4" = 1'-0"

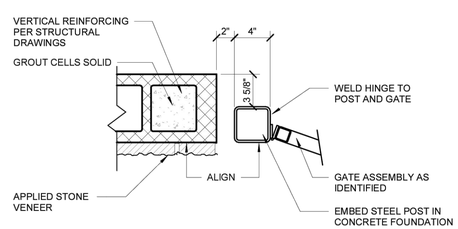

DTL-Trash Enclousre Gate Detail
1 1/2" = 1'-0"

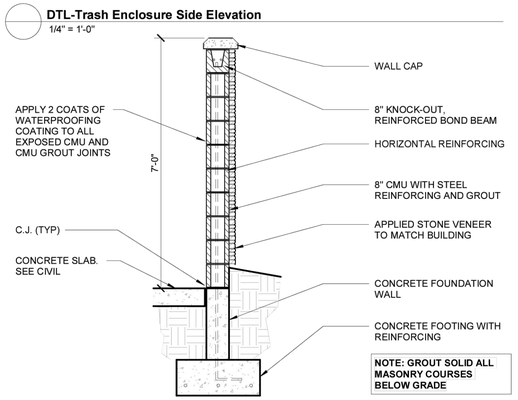

DTL-Trash Enclosure Wall Section
1/2" = 1'-0"

MB Engineering, Inc.
606 Ryan Drive
Energy, IL 62933
(314) 368-3040

STATE OF MISSOURI
MICHAEL A. BUESCHER
NUMBER E-2001018714
REGISTERED PROFESSIONAL ENGINEER
7/25/23

Michael A. Buescher, P.E. Civil Engineering
Missouri P.E. E-2001018714

MB Engineering, Inc. Missouri Authority No. E-2015041404

The Professional Engineer's seal affixed to this sheet indicates that the named Engineer has prepared or directed the preparation of the material shown only on this sheet. Other drawings and documents not exhibiting this seal shall not be considered prepared by or the responsibility of the undersigned.

PROJECT REVISION:

NO:	DATE:	DESCRIPTION:
1	11-21-22	FOR REVIEW
2	05-16-23	CITY COMMENTS
3	07-11-23	CITY COMMENTS
4	07-25-23	CITY COMMENTS

3601 SW Hollywood Dr.
Lee's Summit, MO 64082

DATE: 11-21-22
DRAFTED BY: KB
APPRVD. BY: MB

SHEET TITLE:
TYPICAL DETAILS

SHEET NUMBER:
C3-05

PROJECT NO: 22-752

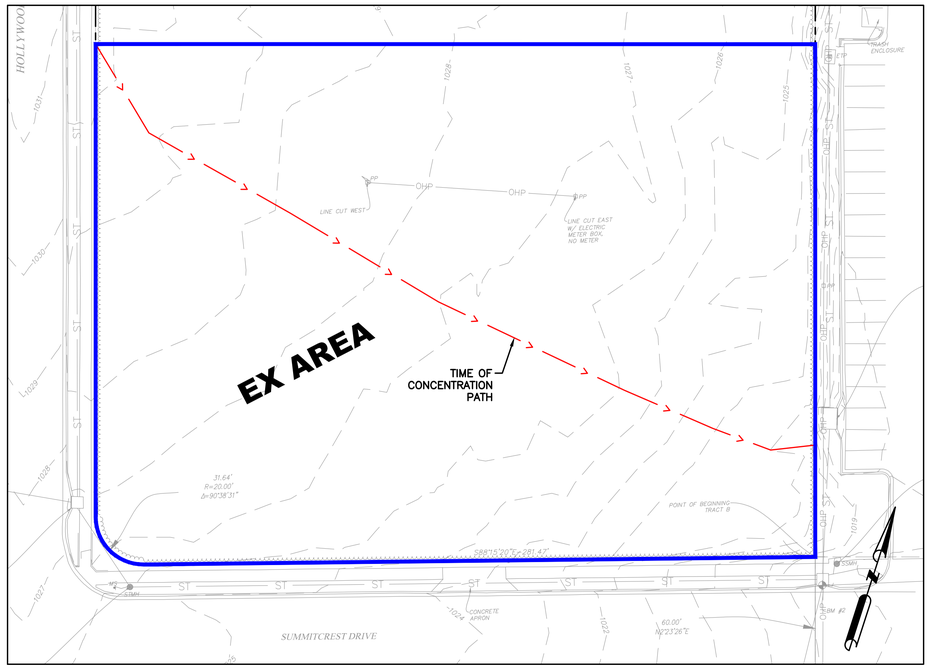

EXISTING AREA: 1.499 ACRES CN = 79

2 YR. = 3.05 CFS
10 YR. = 5.77 CFS
25 YR. = 7.57 CFS
100 YR = 10.45 CFS

A EXISTING DRAINAGE AREA
SCALE: 1" = 30'

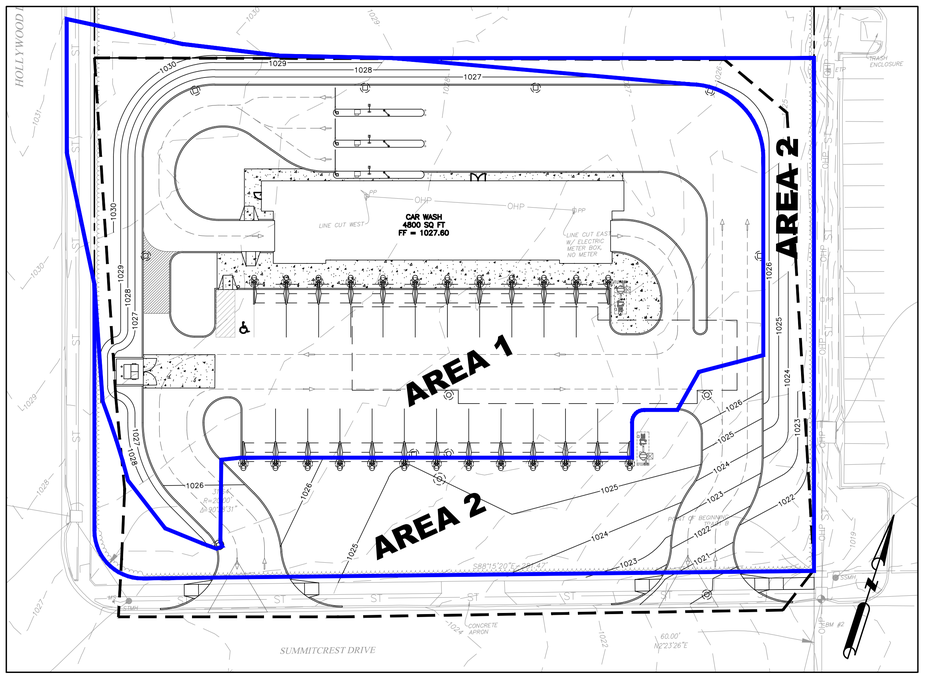

PROPOSED AREA 1: 0.916 ACRES CN = 97

2 YR = 4.32 CFS
10 YR = 6.32 CFS
25 YR = 7.59 CFS
100 YR = 9.59 CFS

PROPOSED AREA 2: 0.471 ACRES CN = 78

2 YR = 1.17 CFS
10 YR = 2.23 CFS
25 YR = 2.94 CFS
100 YR = 4.08 CFS

POST-DEVELOPMENT PEAK DISCHARGE RATES FROM THE SITE SHALL NOT EXCEED:

2YR = 1.499 ACRES * 0.5 CFS/ACRE = 0.75 CFS
10YR = 1.499 ACRES * 2.0 CFS/ACRE = 3.00 CFS
100YR = 1.499 ACRES * 3.0 CFS/ACRE = 4.50 CFS

B PROPOSED DRAINAGE AREA
SCALE: 1" = 30'

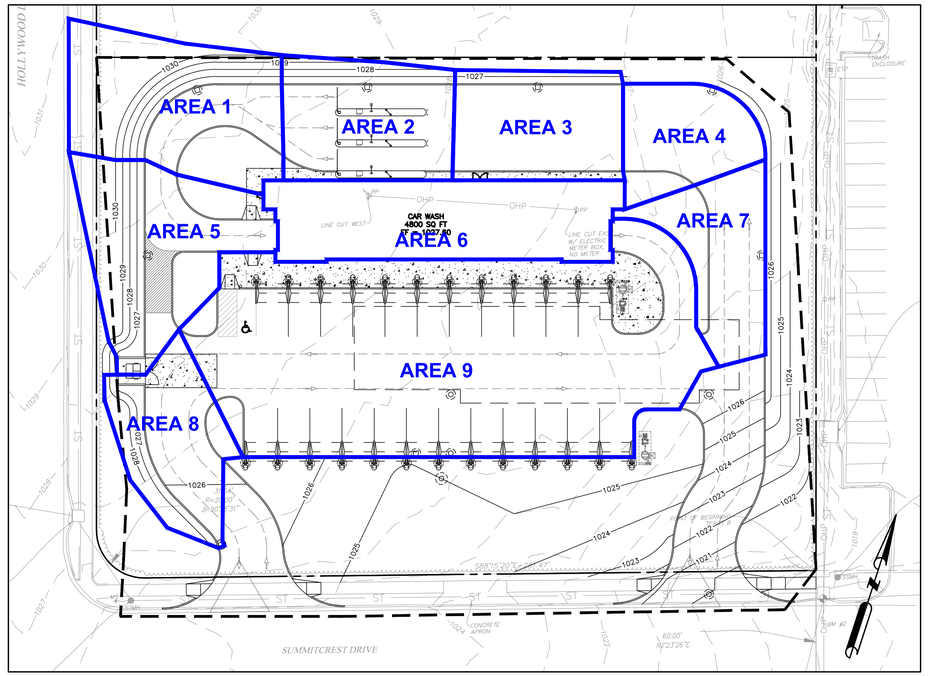

SCALE: 1" = 30'

C INLET DRAINAGE AREAS
SCALE: 1" = 30'

	2-YR (CFS)	10-YR (CFS)	25-YR (CFS)	100-YR (CFS)
AREA 1 IMPERVIOUS AREA = 1,667.89 SQ FT PERVIOUS AREA = 3,315.60 SQ FT TOTAL AREA = 4,983.49 SQ FT	0.34	0.60	0.78	1.05
AREA 2 IMPERVIOUS AREA = 2,900.14 SQ FT PERVIOUS AREA = 672.71 SQ FT TOTAL AREA = 3,572.85 SQ FT	0.36	0.55	0.67	0.85
AREA 3 IMPERVIOUS AREA = 2,878.23 SQ FT PERVIOUS AREA = 374.22 SQ FT TOTAL AREA = 3,252.44 SQ FT	0.34	0.51	0.61	0.78
AREA 4 IMPERVIOUS AREA = 2,043.79 SQ FT PERVIOUS AREA = 583.96 SQ FT TOTAL AREA = 2,327.75 SQ FT	0.26	0.40	0.48	0.62
AREA 5 IMPERVIOUS AREA = 2,054.63 SQ FT PERVIOUS AREA = 2,521.74 SQ FT TOTAL AREA = 4,576.36 SQ FT	0.35	0.60	0.76	1.00
AREA 6 IMPERVIOUS AREA = 4,828.88 SQ FT PERVIOUS AREA = 0.00 SQ FT TOTAL AREA = 4,828.88 SQ FT	0.53	0.77	0.92	1.17
AREA 7 IMPERVIOUS AREA = 1,958.76 SQ FT PERVIOUS AREA = 766.05 SQ FT TOTAL AREA = 2,724.77 SQ FT	0.26	0.40	0.50	0.64
AREA 8 IMPERVIOUS AREA = 1,876.62 SQ FT PERVIOUS AREA = 1,086.96 SQ FT TOTAL AREA = 2,963.58 SQ FT	0.26	0.42	0.52	0.68
AREA 9 IMPERVIOUS AREA = 16,567.27 SQ FT PERVIOUS AREA = 323.41 SQ FT TOTAL AREA = 16,890.68 SQ FT	1.85	2.69	3.22	4.06

Line No.	Line Size	Flow Rate	Invert Up	HGL Up	Depth Up	Area Up	Vel Up	Vel Hd Up	EGL Up	Line Slope	Line Length	Invert Dn	HGL Dn	Depth Dn	Area Dn	Vel Dn	Vel Hd Dn	EGL Dn	Sf Dn	Sf Ave	Energy Loss	J-Loss Coeff	Minor Loss	Line ID
	(in)	(cfs)	(ft)	(ft)	(ft)	(sqft)	(ft/s)	(ft)	(ft)	(%)	(ft)	(ft)	(ft)	(ft)	(sqft)	(ft/s)	(ft)	(ft)	(%)	(%)	(ft)		(ft)	
1	24	10.85	1015.78	1019.49	2.00	3.14	3.45	0.19	1019.67	1.01	24.642	1015.53	1019.44	2.00	3.14	3.45	0.19	1019.63	0.196	0.196	0.048	1.00	0.19	MH (13) - MH (15)
2	24	10.85	1016.89	1019.70	2.00	3.14	3.45	0.19	1019.89	1.03	14.588	1016.74	1019.67	2.00	3.14	3.45	0.19	1019.86	0.196	0.196	0.029	0.65	0.12	GI (8) - MH (13)
3	18	6.11	1017.64	1020.23	1.50	1.77	3.46	0.19	1020.41	1.00	139.767	1016.24	1019.82	1.50	1.77	3.46	0.19	1020.01	0.289	0.289	0.403	0.95	0.18	GI (2) - GI (8)
4	12	3.94	1018.46	1021.16	1.00	0.79	5.02	0.39	1021.55	1.00	72.312	1017.74	1020.40	1.00	0.79	5.02	0.39	1020.79	1.043	1.043	0.754	0.96	0.38	GI (1) - GI (2)
5	12	2.89	1019.27	1021.93	1.00	0.79	3.68	0.21	1022.14	1.00	71.214	1018.56	1021.53	1.00	0.79	3.68	0.21	1021.74	0.561	0.561	0.400	0.15	0.03	GI (4) - GI (1)
6	12	2.04	1020.09	1022.16	1.00	0.79	2.60	0.10	1022.27	1.01	71.501	1019.37	1021.96	1.00	0.79	2.60	0.10	1022.07	0.280	0.280	0.200	0.15	0.02	GI (5) - GI (4)
7	12	1.26	1020.92	1022.26	1.00	0.79	1.60	0.04	1022.30	1.00	73.183	1020.19	1022.18	1.00	0.79	1.60	0.04	1022.22	0.107	0.107	0.078	0.96	0.04	GI (6) - GI (5)
8	12	0.64	1021.74	1022.31	0.57	0.46	1.38	0.03	1022.34	1.00	72.350	1021.02	1022.30	1.00	0.79	0.82	0.01	1022.31	0.028	0.049	0.036	1.00	0.03	GI (7) - GI (6)
9	12	0.68	1021.37	1021.71	0.34**	0.24	2.85	0.13	1021.84	1.11	86.170	1020.41	1020.69	0.28	0.18	3.84	0.13	1020.81	0.000	0.000	0.000	1.00 z	n/a	GI (14) - GI (8)

D 100-YR STORM SEWER HYDRAULICS
NO SCALE

MB Engineering, Inc.
606 Ryan Drive
Energy, IL 62933
(314) 368-3040

STATE OF MISSOURI
MICHAEL A. BUESCHER
NUMBER E-2001018714
REGISTERED PROFESSIONAL ENGINEER

7/25/23

Michael A. Buescher, P.E. Civil Engineering
Missouri P.E. E-2001018714

MB Engineering, Inc. Missouri Authority No. E-2015041404

The Professional Engineer's seal affixed to this sheet indicates that the named Engineer has prepared or directed the preparation of the material shown only on this sheet. Other drawings and documents not exhibiting this seal shall not be considered prepared by or the responsibility of the undersigned.

PROJECT REVISION:

NO:	DATE:	DESCRIPTION:
1	11-21-22	FOR REVIEW
2	05-16-23	CITY COMMENTS
3	07-11-23	CITY COMMENTS
4	07-25-23	CITY COMMENTS

3601 SW Hollywood Dr.
Lee's Summit, MO 64082

DATE: 11-21-22
DRAFTED BY: KB
APPRVD. BY: MB

SHEET TITLE:
DRAINAGE AREA MAP

SHEET NUMBER:
C4-01

PROJECT NO: 22-752